ภาคผนวก

ภาคผนวก ก. รูปจำลองหน้าตัดของโครงสร้าง

CENTERPORT BRIDGE

E = 5800 ksi

ν = 0.0

L = 32 ft.

N = 9 beams

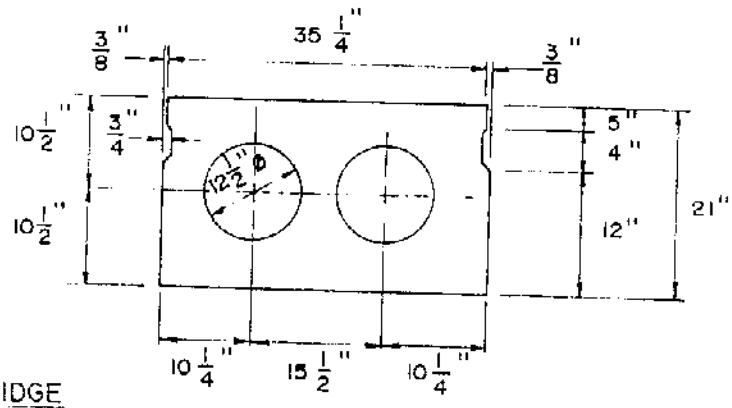

SLIPPERY CREEK BRIDGE

E = 5800 ksi

ν = 0.15

L = 34 ft.

N = 10 beams

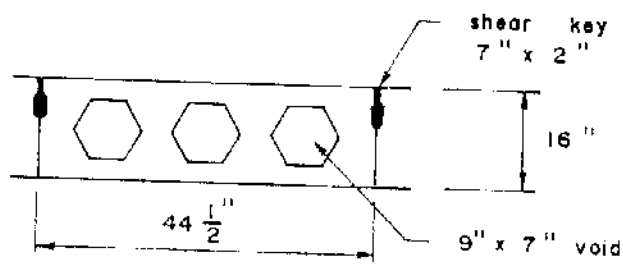

NATHAN'S BRIDGE

E = 5000 ksi

ν = 0.25

L = 50 ft.

N = 6 beams

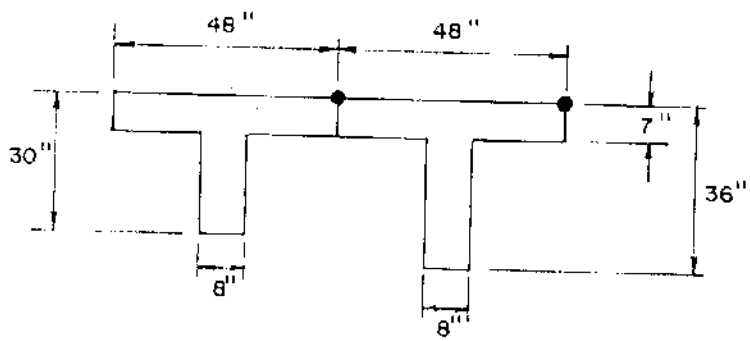

POWELL'S BRIDGE

E = 3000 ksi

ν = 0.15

L = 35 ft.

N = 14 beams

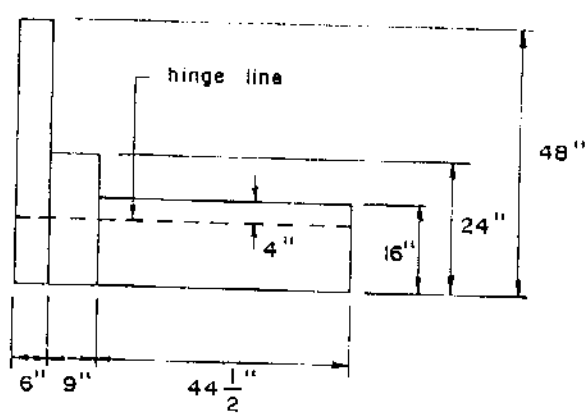

ภาคผนวก ข. ตัวอย่างการใช้โปรแกรม AMS

```
*****************************************************************
              OUTPUT RESULIS OF MULTIBEAM STRUCTURES
DATE      : 06-14-1995            PROJECT TITLE : SPRING
FILENAME : SPRING               ENGINEER       : N.SOMCHAI
*****************************************************************

STRUCTURE IDENTIFICATION
         NO. OF BEAMS        =          10
         NO. OF BEAM TYPE    =          1
         SPAN LENGTH         =          408
         UNIT OF LENGTH      =         INCHES

BEAM TYPE DISTRIBUTION   [ BEAM NO./BEAM TYPE ]
          1/ 1    2/ 1    3/ 1    4/ 1    5/ 1    6/ 1    7/ 1
          8/ 1    9/ 1   10/ 1

BEAM TYPE   1 (HOLLOW CORE)
        DIMENSION                ;
       (1)  =      44.500        ;      E-MOD    = 0.58E+04
       (2)  =       6.750        ;      POIS     = .15
       (3)  =      16.000        ;      AREA     = 560.125
       (4)  =       7.500        ;      I-Y      = 14477.42
       (5)  =       0.000        ;      I-Z      = 94640.37
       (6)  =       0.000        ;      J        = 46821.12
    (BOXES) =           3        ;      G        = 2521.739

SPRING TYPE SHEAR KEY
         NO. OF SHEAR KEY   =          1

SHEAR KEY TYPE DISTRIBUTION   [ SHEAR KEY NO./SHEAR KEY TYPE ]
       1/ 1    2/ 1    3/ 1    4/ 1    5/ 1    6/ 1    7/ 1
       8/ 1    9/ 1

KEY NO.        X           Y           Z           O    L.LEVE  R.LEVEL
  1    0.000E+00  0.100E+09  0.100E+09  0.000E+00    5.000    5.000

LOAD DATA
      UNIT OF FORCES                          =  KIPS
      NUMBER OF LOAD                          =  1
      NUMBER OF HARMONICS                     =  49 @ 2

LOAD ON BEAM NUMBER                           =  1
      LOAD MAGNITUDE                          =  64
      WIDTH OF LOAD                           =  0
      LENGTH OF LOAD                          =  10
      LONGITUDINAL POSITION OF LOAD CENTROID  =  204
      LOAD ECCENTRICITY                       =  0
      LOAD TYPE                               =  CONCEN
```

****** DISPLACEMENTS OF BEAMS AT C.G. ******

BEAM No.= 1

AT POINT	LONGITUDINAL	HORIZONTAL	VERTICAL	ROTATION
0.000L	0.000E+00	0.000E+00	0.000E+00	0.000E+00
0.100L	0.000E+00	1.481E-04	7.371E-02	-2.013E-04
0.200L	0.000E+00	3.093E-04	1.427E-01	-3.985E-04
0.300L	0.000E+00	4.944E-04	2.017E-01	-5.851E-04
0.400L	0.000E+00	7.011E-04	2.443E-01	-7.471E-04
0.500L	0.000E+00	8.459E-04	2.616E-01	-8.348E-04
0.600L	0.000E+00	7.011E-04	2.443E-01	-7.471E-04
0.700L	0.000E+00	4.944E-04	2.017E-01	-5.851E-04
0.800L	0.000E+00	3.093E-04	1.427E-01	-3.985E-04
0.900L	0.000E+00	1.481E-04	7.371E-02	-2.013E-04
1.000L	0.000E+00	1.667E-12	8.512E-10	-2.308E-12

****

****** DISPLACEMENTS OF BEAMS AT C.G. ******

BEAM No.= 2

AT POINT	LONGITUDINAL	HORIZONTAL	VERTICAL	ROTATION
0.000L	0.000E+00	0.000E+00	0.000E+00	0.000E+00
0.100L	0.000E+00	6.260E-04	6.121E-02	-3.606E-04
0.200L	0.000E+00	1.244E-03	1.180E-01	-7.101E-04
0.300L	0.000E+00	1.836E-03	1.657E-01	-1.032E-03
0.400L	0.000E+00	2.348E-03	1.989E-01	-1.296E-03
0.500L	0.000E+00	2.605E-03	2.114E-01	-1.421E-03
0.600L	0.000E+00	2.348E-03	1.989E-01	-1.296E-03
0.700L	0.000E+00	1.836E-03	1.657E-01	-1.032E-03
0.800L	0.000E+00	1.244E-03	1.180E-01	-7.101E-04
0.900L	0.000E+00	6.260E-04	6.121E-02	-3.606E-04
1.000L	0.000E+00	7.165E-12	7.077E-10	-4.140E-12

****

****** DISPLACEMENTS OF BEAMS AT C.G. ******

BEAM No.= 3

AT POINT	LONGITUDINAL	HORIZONTAL	VERTICAL	ROTATION
0.000L	0.000E+00	0.000E+00	0.000E+00	0.000E+00
0.100L	0.000E+00	3.914E-04	4.690E-02	-2.824E-04
0.200L	0.000E+00	7.642E-04	8.996E-02	-5.501E-04
0.300L	0.000E+00	1.090E-03	1.253E-01	-7.837E-04
0.400L	0.000E+00	1.319E-03	1.488E-01	-9.531E-04
0.500L	0.000E+00	1.388E-03	1.572E-01	-1.015E-03
0.600L	0.000E+00	1.319E-03	1.488E-01	-9.531E-04
0.700L	0.000E+00	1.090E-03	1.253E-01	-7.837E-04
0.800L	0.000E+00	7.642E-04	8.996E-02	-5.501E-04
0.900L	0.000E+00	3.914E-04	4.690E-02	-2.824E-04
1.000L	0.000E+00	4.505E-12	5.432E-10	-3.254E-12

****

****** DISPLACEMENTS OF BEAMS AT C.G. ******

BEAM No.= 4

AT POINT	LONGITUDINAL	HORIZONTAL	VERTICAL	ROTATION
0.000L	0.000E+00	0.000E+00	0.000E+00	0.000E+00
0.100L	0.000E+00	1.917E-04	3.581E-02	-2.159E-04
0.200L	0.000E+00	3.639E-04	6.845E-02	-4.167E-04
0.300L	0.000E+00	4.938E-04	9.482E-02	-5.849E-04
0.400L	0.000E+00	5.579E-04	1.121E-01	-6.994E-04
0.500L	0.000E+00	5.633E-04	1.181E-01	-7.406E-04
0.600L	0.000E+00	5.579E-04	1.121E-01	-6.994E-04
0.700L	0.000E+00	4.938E-04	9.482E-02	-5.849E-04
0.800L	0.000E+00	3.639E-04	6.845E-02	-4.167E-04
0.900L	0.000E+00	1.917E-04	3.581E-02	-2.159E-04
1.000L	0.000E+00	2.226E-12	4.153E-10	-2.494E-12

****

****** DISPLACEMENTS OF BEAMS AT C.G. ******

BEAM No.= 5

AT POINT	LONGITUDINAL	HORIZONTAL	VERTICAL	ROTATION
0.000L	0.000E+00	0.000E+00	0.000E+00	0.000E+00
0.100L	0.000E+00	2.839E-05	2.742E-02	-1.614E-04
0.200L	0.000E+00	4.295E-05	5.229E-02	-3.097E-04
0.300L	0.000E+00	3.182E-05	7.222E-02	-4.309E-04
0.400L	0.000E+00	-6.789E-06	8.513E-02	-5.112E-04
0.500L	0.000E+00	-4.037E-05	8.961E-02	-5.393E-04
0.600L	0.000E+00	-6.789E-06	8.513E-02	-5.112E-04
0.700L	0.000E+00	3.182E-05	7.222E-02	-4.309E-04
0.800L	0.000E+00	4.295E-05	5.229E-02	-3.097E-04
0.900L	0.000E+00	2.839E-05	3.742E-02	-1.614E-04
1.000L	0.000E+00	3.510E-13	3.182E-10	-1.869E-12

****

****** DISPLACEMENTS OF BEAMS AT C.G. ******

BEAM No.= 6

AT POINT	LONGITUDINAL	HORIZONTAL	VERTICAL	ROTATION
0.000L	0.000E+00	0.000E+00	0.000E+00	0.000E+00
0.100L	0.000E+00	-1.022E-04	2.120E-02	-1.179E-04
0.200L	0.000E+00	-2.101E-04	4.039E-02	-2.253E-04
0.300L	0.000E+00	-3.247E-04	5.569E-02	-3.120E-04
0.400L	0.000E+00	-4.343E-04	6.556E-02	-3.687E-04
0.500L	0.000E+00	-4.932E-04	6.897E-02	-3.884E-04
0.600L	0.000E+00	-4.343E-04	6.556E-02	-3.687E-04
0.700L	0.000E+00	-3.247E-04	5.569E-02	-3.120E-04
0.800L	0.000E+00	-2.101E-04	4.039E-02	-2.253E-04
0.900L	0.000E+00	-1.022E-04	2.120E-02	-1.179E-04
1.000L	0.000E+00	-1.155E-12	2.462E-10	-1.367E-12

****

****** DISPLACEMENTS OF BEAMS AT C.G. ******

BEAM No.= 7

AT POINT	LONGITUDINAL	HORIZONTAL	VERTICAL	ROTATION
0.000L	0.000E+00	0.000E+00	0.000E+00	0.000E+00
0.100L	0.000E+00	-2.063E-04	1.673E-02	-8.319E-05
0.200L	0.000E+00	-4.100E-04	3.184E-02	-1.587E-04
0.300L	0.000E+00	-6.033E-04	4.387E-02	-2.192E-04
0.400L	0.000E+00	-7.650E-04	5.160E-02	-2.584E-04
0.500L	0.000E+00	-8.423E-04	5.427E-02	-2.720E-04
0.600L	0.000E+00	-7.650E-04	5.160E-02	-2.584E-04
0.700L	0.000E+00	-6.033E-04	4.387E-02	-2.192E-04
0.800L	0.000E+00	-4.100E-04	3.184E-02	-1.587E-04
0.900L	0.000E+00	-2.063E-04	1.673E-02	-8.319E-05
1.000L	0.000E+00	-2.360E-12	1.943E-10	-9.654E-13

****

****** DISPLACEMENTS OF BEAMS AT C.G. ******

BEAM No.= 8

AT POINT	LONGITUDINAL	HORIZONTAL	VERTICAL	ROTATION
0.000L	0.000E+00	0.000E+00	0.000E+00	0.000E+00
0.100L	0.000E+00	-2.907E-04	1.365E-02	-5.507E-05
0.200L	0.000E+00	-5.712E-04	2.598E-02	-1.049E-04
0.300L	0.000E+00	-8.265E-04	3.577E-02	-1.448E-04
0.400L	0.000E+00	-1.029E-03	4.206E-02	-1.705E-04
0.500L	0.000E+00	-1.120E-03	4.423E-02	-1.795E-04
0.600L	0.000E+00	-1.039E-03	4.206E-02	-1.705E-04
0.700L	0.000E+00	-8.265E-04	3.577E-02	-1.448E-04
0.800L	0.000E+00	-5.712E-04	2.598E-02	-1.049E-04
0.900L	0.000E+00	-2.907E-04	1.365E-02	-5.507E-05
1.000L	0.000E+00	-3.339E-12	1.586E-10	-6.393E-13

****

****** DISPLACEMENTS OF BEAMS AT C.G. ******

BEAM No.= 9

AT POINT	LONGITUDINAL	HORIZONTAL	VERTICAL	ROTATION
0.000L	0.000E+00	0.000E+00	0.000E+00	0.000E+00
0.100L	0.000E+00	-3.616E-04	1.173E-02	-3.142E-05
0.200L	0.000E+00	-7.065E-04	2.231E-02	-5.987E-05
0.300L	0.000E+00	-1.013E-03	3.071E-02	-8.260E-05
0.400L	0.000E+00	-1.248E-03	3.610E-02	-9.734E-05
0.500L	0.000E+00	-1.351E-03	3.796E-02	-1.024E-04
0.600L	0.000E+00	-1.248E-03	3.610E-02	-9.734E-05
0.700L	0.000E+00	-1.013E-03	3.071E-02	-8.260E-05
0.800L	0.000E+00	-7.065E-04	2.231E-02	-5.987E-05
0.900L	0.000E+00	-3.616E-04	1.173E-02	-3.142E-05
1.000L	0.000E+00	-4.162E-12	1.362E-10	-3.648E-13

****

****** DISPLACEMENTS OF BEAMS AT C.G. ******

BEAM No.= 10

AT POINT	LONGITUDINAL	HORIZONTAL	VERTICAL	ROTATION
0.000L	0.000E+00	0.000E+00	0.000E+00	0.000E+00
0.100L	0.000E+00	-4.249E-04	1.080E-02	-1.034E-05
0.200L	0.000E+00	-8.269E-04	2.054E-02	-1.973E-05
0.300L	0.000E+00	-1.179E-03	2.826E-02	-2.732E-05
0.400L	0.000E+00	-1.443E-03	3.321E-02	-3.243E-05
0.500L	0.000E+00	-1.555E-03	3.491E-02	-3.454E-05
0.600L	0.000E+00	-1.443E-03	3.321E-02	-3.243E-05
0.700L	0.000E+00	-1.179E-03	2.826E-02	-2.732E-05
0.800L	0.000E+00	-8.269E-04	2.054E-02	-1.973E-05
0.900L	0.000E+00	-4.249E-04	1.080E-02	-1.034E-05
1.000L	0.000E+00	-4.897E-12	1.254E-10	-1.200E-13

****** BEAM FORCES ******

BEAM No.= 1

AT POINT	LONGITUDINAL	HORIZONTAL	VERTICAL	TORSION	M-ZZ	M-YY
0.000 L	0.000E+00	-4.441E-02	5.937E+00	-5.845E+02	0.000E+00	0.000E+00
0.100 L	0.000E+00	-1.722E-01	5.803E+00	-5.788E+02	-4.399E+00	2.379E+02
0.200 L	0.000E+00	1.019E-02	7.100E+00	-5.594E+02	-8.108E+00	4.979E+02
0.300 L	0.000E+00	-1.110E-02	8.531E+00	-5.147E+02	-8.462E+00	8.130E+02
0.400 L	0.000E+00	1.326E+00	1.425E+01	-4.049E+02	1.013E+01	1.257E+03
0.500 L	0.000E+00	4.245E-07	1.237E-06	-4.394E-06	1.673E+02	1.992E+03
0.600 L	0.000E+00	-1.326E+00	-1.425E+01	4.049E+02	1.013E+01	1.257E+03
0.700 L	0.000E+00	1.110E-02	-8.531E+00	5.147E+02	-8.462E+00	8.130E+02
0.800 L	0.000E+00	-1.019E-02	-7.100E+00	5.594E+02	-8.108E+00	4.979E+02
0.900 L	0.000E+00	1.722E-01	-5.803E+00	5.788E+02	-4.399E+00	2.379E+02
1.000 L	0.000E+00	4.441E-02	-5.937E+00	5.845E+02	-2.071E-08	2.768E-06

****** BEAM FORCES ******

BEAM No.= 2

AT POINT	LONGITUDINAL	HORIZONTAL	VERTICAL	TORSION	M-ZZ	M-YY
0.000 L	0.000E+00	6.269E-02	5.386E+00	-1.049E+03	0.000E+00	0.000E+00
0.100 L	0.000E+00	6.103E-02	5.522E+00	-1.033E+03	2.299E+00	2.213E+02
0.200 L	0.000E+00	2.380E-01	6.123E+00	-9.820E+02	7.815E+00	4.574E+02
0.300 L	0.000E+00	6.228E-01	7.104E+00	-8.695E+02	2.382E+01	7.256E+02
0.400 L	0.000E+00	2.210E+00	8.463E+00	-6.228E+02	7.473E+01	1.044E+03
0.500 L	0.000E+00	2.311E-07	2.403E-07	-5.295E-06	2.218E+02	1.334E+03
0.600 L	0.000E+00	-2.210E+00	-8.463E+00	6.228E+02	7.473E+01	1.044E+03
0.700 L	0.000E+00	-6.228E-01	-7.104E+00	8.695E+02	2.382E+01	7.256E+02
0.800 L	0.000E+00	-2.380E-01	-6.123E+00	9.820E+02	7.815E+00	4.574E+02
0.900 L	0.000E+00	-6.103E-02	-5.522E+00	1.033E+03	2.299E+00	2.213E+02
1.000 L	0.000E+00	-6.269E-02	-5.386E+00	1.049E+03	2.923E-08	2.511E-06

****** BEAM FORCES ******

BEAM No.= 3

AT POINT	LONGITUDINAL	HORIZONTAL	VERTICAL	TORSION	M-ZZ	M-YY
0.000 L	0.000E+00	9.292E-02	4.701E+00	-8.241E+02	0.000E+00	0.000E+00
0.100 L	0.000E+00	2.107E-01	4.784E+00	-8.037E+02	5.916E+00	1.931E+02
0.200 L	0.000E+00	2.367E-01	4.913E+00	-7.364E+02	1.483E+01	3.908E+02
0.300 L	0.000E+00	5.998E-01	4.949E+00	-6.014E+02	3.111E+01	5.933E+02
0.400 L	0.000E+00	4.468E-01	3.737E+00	-3.566E+02	5.662E+01	7.786E+02
0.500 L	0.000E+00	-1.915E-07	-3.112E-08	-1.909E-06	1.989E+01	8.452E+02
0.600 L	0.000E+00	-4.468E-01	-3.737E+00	3.566E+02	5.662E+01	7.786E+02
0.700 L	0.000E+00	-5.998E-01	-4.949E+00	6.014E+02	3.111E+01	5.933E+02
0.800 L	0.000E+00	-2.367E-01	-4.913E+00	7.364E+02	1.483E+01	3.908E+02
0.900 L	0.000E+00	-2.107E-01	-4.784E+00	8.037E+02	5.916E+00	1.931E+02
1.000 L	0.000E+00	-9.292E-02	-4.701E+00	8.241E+02	4.332E-08	2.192E-06

****

****** BEAM FORCES ******

BEAM No.= 4

AT POINT	LONGITUDINAL	HORIZONTAL	VERTICAL	TORSION	M-ZZ	M-YY
0.000 L	0.000E+00	1.448E-01	3.939E+00	-6.317E+02	0.000E+00	0.000E+00
0.100 L	0.000E+00	1.704E-01	3.904E+00	-6.105E+02	6.320E+00	1.602E+02
0.200 L	0.000E+00	1.982E-01	3.770E+00	-5.434E+02	1.384E+01	3.174E+02
0.300 L	0.000E+00	1.897E-01	3.257E+00	-4.200E+02	2.227E+01	4.627E+02
0.400 L	0.000E+00	-3.296E-01	1.949E+00	-2.324E+02	2.254E+01	5.723E+02
0.500 L	0.000E+00	-4.268E-08	3.139E-08	-1.457E-06	-6.735E+00	6.168E+02
0.600 L	0.000E+00	3.296E-01	-1.949E+00	2.324E+02	2.254E+01	5.723E+02
0.700 L	0.000E+00	-1.897E-01	-3.257E+00	4.200E+02	2.227E+01	4.627E+02
0.800 L	0.000E+00	-1.982E-01	-3.770E+00	5.434E+02	1.384E+01	3.174E+02
0.900 L	0.000E+00	-1.704E-01	-3.904E+00	6.105E+02	6.320E+00	1.602E+02
1.000 L	0.000E+00	-1.448E-01	-3.939E+00	6.317E+02	6.752E-08	1.836E-06

****

****** BEAM FORCES ******

BEAM No.= 5

AT POINT	LONGITUDINAL	HORIZONTAL	VERTICAL	TORSION	M-ZZ	M-YY
0.000 L	0.000E+00	9.873E-02	3.181E+00	-4.734E+02	0.000E+00	0.000E+00
0.100 L	0.000E+00	1.258E-01	3.110E+00	-4.546E+02	4.595E+00	1.289E+02
0.200 L	0.000E+00	6.394E-02	2.836E+00	-3.968E+02	8.688E+00	2.510E+02
0.300 L	0.000E+00	-2.765E-02	2.258E+00	-2.980E+02	9.903E+00	3.562E+02
0.400 L	0.000E+00	-5.054E-01	1.278E+00	-1.611E+02	6.659E-01	4.295E+02
0.500 L	0.000E+00	-9.357E-08	-4.008E-10	-9.199E-07	-3.844E+01	4.554E+02
0.600 L	0.000E+00	5.054E-01	-1.278E+00	1.611E+02	6.659E-01	4.295E+02
0.700 L	0.000E+00	2.765E-02	-2.258E+00	2.980E+02	9.903E+00	3.562E+02
0.800 L	0.000E+00	-6.394E-02	-2.836E+00	3.968E+02	8.688E+00	2.510E+02
0.900 L	0.000E+00	-1.258E-01	-3.110E+00	4.546E+02	4.595E+00	1.289E+02
1.000 L	0.000E+00	-9.873E-02	-3.181E+00	4.734E+02	4.603E-08	1.483E-06

****

****** BEAM FORCES ******

BEAM No.= 6

AT POINT	LONGITUDINAL	HORIZONTAL	VERTICAL	TORSION	M-ZZ	M-YY
0.000 L	0.000E+00	4.796E-02	2.541E+00	-3.462E+02	0.000E+00	0.000E+00
0.100 L	0.000E+00	4.433E-02	2.450E+00	-3.311E+02	1.983E+00	1.024E+02
0.200 L	0.000E+00	-2.635E-02	2.166E+00	-2.858E+02	2.577E+00	1.973E+02
0.300 L	0.000E+00	-1.637E-01	1.647E+00	-2.115E+02	-8.910E-01	2.760E+02
0.400 L	0.000E+00	-5.670E-01	9.020E-01	-1.128E+02	-1.438E+01	3.287E+02
0.500 L	0.000E+00	-6.620E-08	8.001E-09	-6.687E-07	-5.318E+01	3.476E+02
0.600 L	0.000E+00	5.670E-01	-9.020E-01	1.128E+02	-1.438E+01	3.287E+02
0.700 L	0.000E+00	1.637E-01	-1.647E+00	2.115E+02	-8.910E-01	2.760E+02
0.800 L	0.000E+00	2.635E-02	-2.166E+00	2.858E+02	2.577E+00	1.973E+02
0.900 L	0.000E+00	-4.433E-02	-2.450E+00	3.311E+02	1.983E+00	1.024E+02
1.000 L	0.000E+00	-4.796E-02	-2.541E+00	3.462E+02	2.236E-08	1.185E-06

****

****** BEAM FORCES ******

BEAM No.= 7

AT POINT	LONGITUDINAL	HORIZONTAL	VERTICAL	TORSION	M-ZZ	M-YY
0.000 L	0.000E+00	-1.797E-02	2.039E+00	-2.445E+02	0.000E+00	0.000E+00
0.100 L	0.000E+00	-2.331E-02	1.954E+00	-2.333E+02	-7.170E-01	8.205E+01
0.200 L	0.000E+00	-1.040E-01	1.693E+00	-2.001E+02	-3.092E+00	1.571E+02
0.300 L	0.000E+00	-2.339E-01	1.261E+00	-1.470E+02	-9.646E+00	2.179E+02
0.400 L	0.000E+00	-6.193E-01	6.732E-01	-7.793E+01	-2.573E+01	2.578E+02
0.500 L	0.000E+00	-7.276E-08	2.726E-09	-4.497E-07	-6.605E+01	2.717E+02
0.600 L	0.000E+00	6.193E-01	-6.732E-01	7.793E+01	-2.573E+01	2.578E+02
0.700 L	0.000E+00	2.339E-01	-1.261E+00	1.470E+02	-9.646E+00	2.179E+02
0.800 L	0.000E+00	1.040E-01	-1.693E+00	2.001E+02	-3.092E+00	1.571E+02
0.900 L	0.000E+00	2.331E-02	-1.954E+00	2.333E+02	-7.170E-01	8.205E+01
1.000 L	0.000E+00	1.797E-03	-2.039E+00	2.445E+02	-8.378E-09	9.506E-07

****

****** BEAM FORCES ******

BEAM No.= 8

AT POINT	LONGITUDINAL	HORIZONTAL	VERTICAL	TORSION	M-ZZ	M-YY
0.000 L	0.000E+00	-7.555E-02	1.680E+00	-1.619E+02	0.000E+00	0.000E+00
0.100 L	0.000E+00	-8.704E-02	1.604E+00	-1.543E+02	-3.189E+00	6.752E+01
0.200 L	0.000E+00	-1.592E-01	1.376E+00	-1.320E+02	-8.018E+00	1.288E+02
0.300 L	0.000E+00	-2.879E-01	1.009E+00	-9.661E+01	-1.681E+01	1.779E+02
0.400 L	0.000E+00	-6.373E-01	5.359E-01	-5.108E+01	-3.447E+01	2.097E+02
0.500 L	0.000E+00	-6.452E-08	2.834E-09	-3.013E-07	-7.477E+01	2.207E+02
0.600 L	0.000E+00	6.373E-01	-5.359E-01	5.108E+01	-3.447E+01	2.097E+02
0.700 L	0.000E+00	2.879E-01	-1.009E+00	9.661E+01	-1.681E+01	1.779E+02
0.800 L	0.000E+00	1.592E-01	-1.376E+00	1.320E+02	-8.018E+00	1.288E+02
0.900 L	0.000E+00	8.704E-02	-1.604E+00	1.543E+02	-3.189E+00	6.752E+01
1.000 L	0.000E+00	7.555E-02	-1.680E+00	1.619E+02	-3.522E-08	7.834E-07

****

****** BEAM FORCES ******

BEAM No.= 9

AT POINT	LONGITUDINAL	HORIZONTAL	VERTICAL	TORSION	M-ZZ	M-YY
0.000 L	0.000E+00	-1.304E-01	1.452E+00	-9.239E+01	0.000E+00	0.000E+00
0.100 L	0.000E+00	-1.398E-01	1.383E+00	-8.803E+01	-5.395E+00	5.829E+01
0.200 L	0.000E+00	-2.083E-01	1.180E+00	-7.528E+01	-1.232E+01	1.110E+02
0.300 L	0.000E+00	-3.252E-01	8.578E-01	-5.517E+01	-2.290E+01	1.530E+02
0.400 L	0.000E+00	-6.518E-01	4.429E-01	-2.935E+01	-4.169E+01	1.797E+02
0.500 L	0.000E+00	-6.947E-08	4.062E-09	-1.627E-07	-8.295E+01	1.892E+02
0.600 L	0.000E+00	6.518E-01	-4.429E-01	2.935E+01	-4.169E+01	1.797E+02
0.700 L	0.000E+00	3.252E-01	-8.578E-01	5.517E+01	-2.290E+01	1.530E+02
0.800 L	0.000E+00	2.083E-01	-1.180E+00	7.528E+01	-1.232E+01	1.110E+02
0.900 L	0.000E+00	1.398E-01	-1.383E+00	8.803E+01	-5.395E+00	5.829E+01
1.000 L	0.000E+00	1.304E-01	-1.452E+00	9.239E+01	-6.081E-08	6.768E-07

****

****** BEAM FORCES ******

BEAM No.= 10

AT POINT	LONGITUDINAL	HORIZONTAL	VERTICAL	TORSION	M-ZZ	M-YY
0.000 L	0.000E+00	-1.788E-01	1.341E+00	-3.038E+01	0.000E+00	0.000E+00
0.100 L	0.000E+00	-1.900E-01	1.277E+00	-2.899E+01	-7.413E+00	5.386E+01
0.200 L	0.000E+00	-2.492E-01	1.088E+00	-2.495E+01	-1.621E+01	1.025E+02
0.300 L	0.000E+00	-3.628E-01	7.890E-01	-1.864E+01	-2.839E+01	1.411E+02
0.400 L	0.000E+00	-6.728E-01	3.941E-01	-1.079E+01	-4.842E+01	1.656E+02
0.500 L	0.000E+00	-5.480E-08	-3.058E-09	-9.635E-08	-8.688E+01	1.716E+02
0.600 L	0.000E+00	6.728E-01	-3.941E-01	1.079E+01	-4.842E+01	1.656E+02
0.700 L	0.000E+00	3.628E-01	-7.890E-01	1.864E+01	-2.839E+01	1.411E+02
0.800 L	0.000E+00	2.492E-01	-1.088E+00	2.495E+01	-1.621E+01	1.025E+02
0.900 L	0.000E+00	1.900E-01	-1.277E+00	2.899E+01	-7.413E+00	5.386E+01
1.000 L	0.000E+00	1.788E-01	-1.341E+00	3.038E+01	-8.334E-08	6.254E-07

****

****** FIBER STRESS OF BEAM ******

BEAM No. 1

AT POINT	-22.25 0.00	22.25 0.00	22.25 16.00	-22.25 16.00
0.000L	0.000E+00	0.000E+00	0.000E+00	0.000E+00
0.100L	-1.304E-01	-1.325E-01	1.304E-01	1.325E-01
0.200L	-2.732E-01	-2.770E-01	2.732E-01	2.770E-01
0.300L	-4.473E-01	-4.513E-01	4.473E-01	4.513E-01
0.400L	-6.969E-01	-6.921E-01	6.969E-01	6.921E-01
0.500L	-1.140E+00	-1.061E+00	1.140E+00	1.061E+00
0.600L	-6.969E-01	-6.921E-01	6.969E-01	6.921E-01
0.700L	-4.473E-01	-4.513E-01	4.473E-01	4.513E-01
0.800L	-2.732E-01	-2.770E-01	2.732E-01	2.770E-01
0.900L	-1.304E-01	-1.325E-01	1.304E-01	1.325E-01
1.000L	-1.525E-09	-1.534E-09	1.525E-09	1.534E-09

****

****** FIBER STRESS OF BEAM ******

BEAM No. 2

AT POINT	-22.25 0.00	22.25 0.00	22.25 16.00	-22.25 16.00
0.000L	0.000E+00	0.000E+00	0.000E+00	0.000E+00
0.100L	-1.229E-01	-1.218E-01	1.229E-01	1.218E-01
0.200L	-2.546E-01	-2.509E-01	2.546E-01	2.509E-01
0.300L	-4.066E-01	-3.954E-01	4.066E-01	3.954E-01
0.400L	-5.945E-01	-5.593E-01	5.945E-01	5.593E-01
0.500L	-7.894E-01	-6.852E-01	7.894E-01	6.852E-01
0.600L	-5.945E-01	-5.593E-01	5.945E-01	5.593E-01
0.700L	-4.066E-01	-3.954E-01	4.066E-01	3.954E-01
0.800L	-2.546E-01	-2.509E-01	2.546E-01	2.509E-01
0.900L	-1.229E-01	-1.218E-01	1.229E-01	1.218E-01
1.000L	-1.395E-09	-1.381E-09	1.395E-09	1.381E-09

****

****** FIBER STRESS OF BEAM ******

BEAM No. 3

AT POINT	-22.25 0.00	22.25 0.00	22.25 16.00	-22.25 16.00
0.000L	0.000E+00	0.000E+00	0.000E+00	0.000E+00
0.100L	-1.081E-01	-1.053E-01	1.081E-01	1.053E-01
0.200L	-2.194E-01	-2.125E-01	2.194E-01	2.125E-01
0.300L	-3.352E-01	-3.205E-01	3.352E-01	3.205E-01
0.400L	-4.435E-01	-4.169E-01	4.435E-01	4.169E-01
0.500L	-4.717E-01	-4.624E-01	4.717E-01	4.624E-01
0.600L	-4.435E-01	-4.169E-01	4.435E-01	4.169E-01
0.700L	-3.352E-01	-3.205E-01	3.352E-01	3.205E-01
0.800L	-2.194E-01	-2.125E-01	2.194E-01	2.125E-01
0.900L	-1.081E-01	-1.053E-01	1.081E-01	1.053E-01
1.000L	-1.221E-09	-1.201E-09	1.221E-09	1.201E-09

****

****** FIBER STRESS OF BEAM ******

BEAM No. 4

AT POINT	-22.25 0.00	22.25 0.00	22.25 16.00	-22.25 16.00
0.000L	0.000E+00	0.000E+00	0.000E+00	0.000E+00
0.100L	-9.002E-02	-8.705E-02	9.002E-02	8.705E-02
0.200L	-1.787E-01	-1.721E-01	1.787E-01	1.721E-01
0.300L	-2.609E-01	-2.505E-01	2.609E-01	2.505E-01
0.400L	-3.215E-01	-3.109E-01	3.215E-01	3.109E-01
0.500L	-3.392E-01	-3.424E-01	3.392E-01	3.424E-01
0.600L	-3.215E-01	-3.109E-01	3.215E-01	3.109E-01
0.700L	-2.609E-01	-2.505E-01	2.609E-01	2.505E-01
0.800L	-1.787E-01	-1.721E-01	1.787E-01	1.721E-01
0.900L	-9.002E-02	-8.705E-02	9.002E-02	8.705E-02
1.000L	-1.031E-09	-9.989E-10	1.031E-09	9.989E-10

****

****** FIBER STRESS OF BEAM ******

BEAM No. 5

AT POINT	-22.25 0.00	22.25 0.00	22.25 16.00	-22.25 16.00
0.000L	0.000E+00	0.000E+00	0.000E+00	0.000E+00
0.100L	-7.229E-02	-7.013E-02	7.229E-02	7.013E-02
0.200L	-1.407E-01	-1.367E-01	1.407E-01	1.367E-01
0.300L	-1.992E-01	-1.945E-01	1.992E-01	1.945E-01
0.400L	-2.375E-01	-2.372E-01	2.375E-01	2.372E-01
0.500L	-2.426E-01	-2.607E-01	2.426E-01	2.607E-01
0.600L	-2.375E-01	-2.372E-01	2.375E-01	2.372E-01
0.700L	-1.992E-01	-1.945E-01	1.992E-01	1.945E-01
0.800L	-1.407E-01	-1.367E-01	1.407E-01	1.367E-01
0.900L	-7.229E-02	-7.013E-02	7.229E-02	7.013E-02
1.000L	-8.304E-10	-8.087E-10	8.304E-10	8.087E-10

****

****** FIBER STRESS OF BEAM ******

BEAM No. 6

AT POINT	-22.25 0.00	22.25 0.00	22.25 16.00	-22.25 16.00
0.000L	0.000E+00	0.000E+00	0.000E+00	0.000E+00
0.100L	-5.708E-02	-5.614E-02	5.708E-02	5.614E-02
0.200L	-1.097E-01	-1.084E-01	1.097E-01	1.084E-01
0.300L	-1.523E-01	-1.527E-01	1.523E-01	1.527E-01
0.400L	-1.783E-01	-1.850E-01	1.783E-01	1.850E-01
0.500L	-1.796E-01	-2.046E-01	1.796E-01	2.046E-01
0.600L	-1.783E-01	-1.850E-01	1.783E-01	1.850E-01
0.700L	-1.523E-01	-1.527E-01	1.523E-01	1.527E-01
0.800L	-1.097E-01	-1.084E-01	1.097E-01	1.084E-01
0.900L	-5.708E-02	-5.614E-02	5.708E-02	5.614E-02
1.000L	-6.599E-10	-6.494E-10	6.599E-10	6.494E-10

****

****** FIBER STRESS OF BEAM ******

BEAM No. 7

AT POINT	-22.25 0.00	22.25 0.00	22.25 16.00	-22.25 16.00
0.000L	0.000E+00	0.000E+00	0.000E+00	0.000E+00
0.100L	-4.517E-02	-4.551E-02	4.517E-02	4.551E-02
0.200L	-8.607E-02	-8.752E-02	8.607E-02	8.752E-02
0.300L	-1.181E-01	-1.227E-01	1.181E-01	1.227E-01
0.400L	-1.364E-01	-1.485E-01	1.364E-01	1.485E-01
0.500L	-1.346E-01	-1.656E-01	1.346E-01	1.656E-01
0.600L	-1.364E-01	-1.485E-01	1.364E-01	1.485E-01
0.700L	-1.181E-01	-1.227E-01	1.181E-01	1.227E-01
0.800L	-8.607E-02	-8.752E-02	8.607E-02	8.752E-02
0.900L	-4.517E-02	-4.551E-02	4.517E-02	4.551E-02
1.000L	-5.233E-10	-5.273E-10	5.233E-10	5.273E-10

****

****** FIBER STRESS OF BEAM ******

BEAM No. 8

AT POINT	-22.25 0.00	22.25 0.00	22.25 16.00	-22.25 16.00
0.000L	0.000E+00	0.000E+00	0.000E+00	0.000E+00
0.100L	-3.656E-02	-3.806E-02	3.656E-02	3.806E-02
0.200L	-6.929E-02	-7.306E-02	6.929E-02	7.306E-02
0.300L	-9.436E-02	-1.023E-01	9.436E-02	1.023E-01
0.400L	-1.078E-01	-1.240E-01	1.078E-01	1.240E-01
0.500L	-1.044E-01	-1.395E-01	1.044E-01	1.395E-01
0.600L	-1.078E-01	-1.240E-01	1.078E-01	1.240E-01
0.700L	-9.436E-02	-1.023E-01	9.436E-02	1.023E-01
0.800L	-6.929E-02	-7.306E-02	6.929E-02	7.306E-02
0.900L	-3.656E-02	-3.806E-02	3.656E-02	3.806E-02
1.000L	-4.246E-10	-4.412E-10	4.246E-10	4.412E-10

****

****** FIBER STRESS OF BEAM ******

BEAM No. 9

AT POINT	-22.25 0.00	22.25 0.00	22.25 16.00	-22.25 16.00
0.000L	0.000E+00	0.000E+00	0.000E+00	0.000E+00
0.100L	-3.094E-02	-3.348E-03	3.094E-02	3.348E-02
0.200L	-5.845E-02	-6.424E-02	5.845E-02	6.424E-02
0.300L	-7.914E-02	-8.990E-02	7.914E-03	8.990E-02
0.400L	-8.952E-02	-1.091E-01	8.952E-02	1.091E-01
0.500L	-8.504E-02	-1.240E-01	8.504E-02	1.240E-01
0.600L	-8.952E-02	-1.091E-01	8.952E-02	1.091E-01
0.700L	-7.914E-02	-8.990E-02	7.914E-02	8.990E-02
0.800L	-5.845E-02	-6.424E-02	5.845E-02	6.424E-02
0.900L	-3.094E-02	-3.348E-02	3.094E-02	3.348E-02
1.000L	-3.597E-10	-3.883E-10	3.597E-10	3.883E-10

****

****** FIBER STRESS OF BEAM ******

BEAM No. 10

AT POINT	-22.25 0.00	22.25 0.00	22.25 16.00	-22.25 16.00
0.000L	0.000E+00	0.000E+00	0.000E+00	0.000E+00
0.100L	-2.802E-02	-3.150E-02	2.802E-02	3.150E-02
0.200L	-5.283E-02	-6.045E-02	5.283E-02	6.045E-02
0.300L	-7.131E-02	-8.466E-02	7.131E-02	8.466E-02
0.400L	-8.012E-02	-1.029E-01	8.012E-02	1.029E-01
0.500L	-7.440E-02	-1.152E-01	7.440E-02	1.152E-01
0.600L	-8.012E-02	-1.029E-01	8.012E-02	1.029E-01
0.700L	-7.131E-02	-8.466E-02	7.131E-02	8.466E-02
0.800L	-5.283E-02	-6.045E-02	5.283E-02	6.045E-02
0.900L	-2.802E-02	-3.150E-02	2.802E-02	3.150E-02
1.000L	-3.260E-10	-3.652E-10	3.260E-10	3.652E-10

****

****** INTERNAL FORCES OF SHEAR KEY ******

SHEAR KEYS NO. 1

AT POINT	LONGITUDINAL	HORIZONTAL	VERTICAL	ROTATION
0.000L	0.000E+00	0.000E+00	0.000E+00	0.000E+00
0.100L	0.000E+00	7.165E-04	1.265E-02	0.000E+00
0.200L	0.000E+00	6.391E-04	3.183E-02	0.000E+00
0.300L	0.000E+00	1.115E-02	7.064E-02	0.000E+00
0.400L	0.000E+00	4.819E-02	1.915E-01	0.000E+00
0.500L	0.000E+00	-1.821E+00	1.093E+00	0.000E+00
0.600L	0.000E+00	4.819E-02	1.915E-01	0.000E+00
0.700L	0.000E+00	1.115E-02	7.064E-02	0.000E+00
0.800L	0.000E+00	6.392E-04	3.183E-02	0.000E+00
0.900L	0.000E+00	7.166E-04	1.265E-02	0.000E+00
1.000L	0.000E+00	-4.496E-09	8.958E-10	0.000E+00

****

****** INTERNAL FORCES OF SHEAR KEY ******

SHEAR KEYS NO. 2

AT POINT	LONGITUDINAL	HORIZONTAL	VERTICAL	ROTATION
0.000L	0.000E+00	0.000E+00	0.000E+00	0.000E+00
0.100L	0.000E+00	2.672E-03	2.142E-02	0.000E+00
0.200L	0.000E+00	5.795E-03	5.070E-02	0.000E+00
0.300L	0.000E+00	3.068E-02	1.029E-01	0.000E+00
0.400L	0.000E+00	1.088E-01	2.065E-01	0.000E+00
0.500L	0.000E+00	-2.812E+00	6.190E-02	0.000E+00
0.600L	0.000E+00	1.088E-01	2.065E-01	0.000E+00
0.700L	0.000E+00	3.068E-02	1.029E-01	0.000E+00
0.800L	0.000E+00	5.796E-03	5.070E-02	0.000E+00
0.900L	0.000E+00	2.672E-03	2.142E-02	0.000E+00
1.000L	0.000E+00	-5.657E-09	-3.007E-10	0.000E+00

****

****** INTERNAL FORCES OF SHEAR KEY ******

SHEAR KEYS NO. 3

AT POINT	LONGITUDINAL	HORIZONTAL	VERTICAL	ROTATION
0.000L	0.000E+00	0.000E+00	0.000E+00	0.000E+00
0.100L	0.000E+00	4.232E-03	2.436E-02	0.000E+00
0.200L	0.000E+00	1.059E-02	5.448E-02	0.000E+00
0.300L	0.000E+00	3.669E-02	9.594E-02	0.000E+00
0.400L	0.000E+00	9.589E-02	1.431E-01	0.000E+00
0.500L	0.000E+00	-1.991E+00	1.954E-01	0.000E+00
0.600L	0.000E+00	9.589E-02	1.431E-01	0.000E+00
0.700L	0.000E+00	3.669E-02	9.594E-02	0.000E+00
0.800L	0.000E+00	1.059E-02	5.448E-02	0.000E+00
0.900L	0.000E+00	4.232E-03	2.436E-02	0.000E+00
1.000L	0.000E+00	-2.805E-09	3.853E-10	0.000E+00

****

****** INTERNAL FORCES OF SHEAR KEY ******

SHEAR KEYS NO. 4

AT POINT	LONGITUDINAL	HORIZONTAL	VERTICAL	ROTATION
0.000L	0.000E+00	0.000E+00	0.000E+00	0.000E+00
0.100L	0.000E+00	4.964E-03	2.283E-02	0.000E+00
0.200L	0.000E+00	1.154E-02	4.802E-02	0.000E+00
0.300L	0.000E+00	3.305E-02	7.574E-02	0.000E+00
0.400L	0.000E+00	7.214E-02	9.814E-02	0.000E+00
0.500L	0.000E+00	-1.807E+00	6.076E-02	0.000E+00
0.600L	0.000E+00	7.214E-02	9.814E-02	0.000E+00
0.700L	0.000E+00	3.305E-02	7.574E-02	0.000E+00
0.800L	0.000E+00	1.154E-02	4.802E-02	0.000E+00
0.900L	0.000E+00	4.964E-03	2.283E-02	0.000E+00
1.000L	0.000E+00	-2.477E-09	1.102E-10	0.000E+00

****

****** INTERNAL FORCES OF SHEAR KEY ******

SHEAR KEYS NO. 5

AT POINT	LONGITUDINAL	HORIZONTAL	VERTICAL	ROTATION
0.000L	0.000E+00	0.000E+00	0.000E+00	0.000E+00
0.100L	0.000E+00	4.654E-03	1.895E-02	0.000E+00
0.200L	0.000E+00	1.031E-02	3.818E-02	0.000E+00
0.300L	0.000E+00	2.654E-02	5.648E-02	0.000E+00
0.400L	0.000E+00	6.002E-02	7.097E-02	0.000E+00
0.500L	0.000E+00	-1.406E+00	6.248E-02	0.000E+00
0.600L	0.000E+00	6.002E-02	7.097E-02	0.000E+00
0.700L	0.000E+00	2.654E-02	5.648E-02	0.000E+00
0.800L	0.000E+00	1.031E-02	3.818E-02	0.000E+00
0.900L	0.000E+00	4.654E-03	1.895E-02	0.000E+00
1.000L	0.000E+00	-1.461E-09	2.167E-10	0.000E+00

****

****** INTERNAL FORCES OF SHEAR KEY ******

SHEAR KEYS NO. 6

AT POINT	LONGITUDINAL	HORIZONTAL	VERTICAL	ROTATION
0.000L	0.000E+00	0.000E+00	0.000E+00	0.000E+00
0.100L	0.000E+00	3.822E-03	1.449E-02	0.000E+00
0.200L	0.000E+00	8.172E-03	2.845E-02	0.000E+00
0.300L	0.000E+00	2.053E-02	4.089E-02	0.000E+00
0.400L	0.000E+00	4.633E-02	4.984E-02	0.000E+00
0.500L	0.000E+00	-1.122E+00	2.816E-02	0.000E+00
0.600L	0.000E+00	4.633E-02	4.984E-02	0.000E+00
0.700L	0.000E+00	2.053E-02	4.089E-02	0.000E+00
0.800L	0.000E+00	8.172E-03	2.845E-02	0.000E+00
0.900L	0.000E+00	3.822E-03	1.449E-02	0.000E+00
1.000L	0.000E+00	-1.102E-09	1.184E-10	0.000E+00

****

****** INTERNAL FORCES OF SHEAR KEY ******

SHEAR KEYS NO. 7

AT POINT	LONGITUDINAL	HORIZONTAL	VERTICAL	ROTATION
0.000L	0.000E+00	0.000E+00	0.000E+00	0.000E+00
0.100L	0.000E+00	2.800E-03	1.027E-02	0.000E+00
0.200L	0.000E+00	5.943E-03	1.992E-02	0.000E+00
0.300L	0.000E+00	1.478E-02	2.823E-02	0.000E+00
0.400L	0.000E+00	3.427E-02	3.417E-02	0.000E+00
0.500L	0.000E+00	-8.099E-01	1.647E-02	0.000E+00
0.600L	0.000E+00	3.427E-02	3.417E-02	0.000E+00
0.700L	0.000E+00	1.478E-02	2.823E-02	0.000E+00
0.800L	0.000E+00	5.943E-03	1.992E-02	0.000E+00
0.900L	0.000E+00	2.800E-03	1.027E-02	0.000E+00
1.000L	0.000E+00	-6.614E-10	1.038E-10	0.000E+00

****

****** INTERNAL FORCES OF SHEAR KEY ******

SHEAR KEYS NO. 8

AT POINT	LONGITUDINAL	HORIZONTAL	VERTICAL	ROTATION
0.000L	0.000E+00	0.000E+00	0.000E+00	0.000E+00
0.100L	0.000E+00	1.792E-03	6.519E-03	0.000E+00
0.200L	0.000E+00	3.797E-03	1.257E-02	0.000E+00
0.300L	0.000E+00	9.516E-03	1.773E-02	0.000E+00
0.400L	0.000E+00	2.214E-02	2.168E-02	0.000E+00
0.500L	0.000E+00	-5.331E-01	4.307E-03	0.000E+00
0.600L	0.000E+00	2.214E-02	2.168E-02	0.000E+00
0.700L	0.000E+00	9.516E-03	1.773E-02	0.000E+00
0.800L	0.000E+00	3.797E-03	1.257E-02	0.000E+00
0.900L	0.000E+00	1.792E-03	6.519E-03	0.000E+00
1.000L	0.000E+00	-4.209E-10	5.703E-11	0.000E+00

****

****** INTERNAL FORCES OF SHEAR KEY ******

SHEAR KEYS NO. 9

AT POINT	LONGITUDINAL	HORIZONTAL	VERTICAL	ROTATION
0.000L	0.000E+00	0.000E+00	0.000E+00	0.000E+00
0.100L	0.000E+00	8.434E-04	3.155E-03	0.000E+00
0.200L	0.000E+00	1.838E-03	6.048E-03	0.000E+00
0.300L	0.000E+00	4.583E-03	8.567E-03	0.000E+00
0.400L	0.000E+00	1.115E-02	1.074E-02	0.000E+00
0.500L	0.000E+00	-2.351E-01	-1.312E-02	0.000E+00
0.600L	0.000E+00	1.115E-02	1.074E-02	0.000E+00
0.700L	0.000E+00	4.583E-03	8.567E-03	0.000E+00
0.800L	0.000E+00	1.838E-03	6.048E-03	0.000E+00
0.900L	0.000E+00	8.434E-04	3.155E-03	0.000E+00
1.000L	0.000E+00	-1.512E-10	1.620E-11	0.000E+00

****

```
*************************************************************
            OUTPUT RESULIS OF MULTIBEAM STRUCTURES
DATE      : 06-15-1995          PROJECT TITLE : PLATE TYPE SHEAR KEY
FILENAME : PLATE              ENGINEER       : N.SOMCHAI
*************************************************************

STRUCTURE IDENTIFICATION
         NO. OF BEAMS        =          5
         NO. OF BEAM TYPE    =          1
         SPAN LENGTH         =          240
         UNIT OF LENGTH      =         INCHES

BEAM TYPE DISTRIBUTION   [ BEAM NO./BEAM TYPE ]
          1/ 1    2/ 1    3/ 1    4/ 1    5/ 1

BEAM TYPE   1 (RECTANGULAR)
        DIMENSION            ;
       (1)       10          ;      E-MOD    = 0.30E+04
       (2)       20          ;      POIS     = 0
       (3)        0          ;      AREA     = 200
       (4)        0          ;      I-Y      = 6666.667
       (5)        0          ;      I-Z      = 1666.667
       (6)        0          ;      J        = 4580
     (BOXES)      0          ;      G        = 1500

PLATE TYPE SHEAR KEY
       NO. OF SHEAR KEY   =            1

SHEAR KEY TYPE DISTRIBUTION   [ SHEAR KEY NO./SHEAR KEY TYPE ]
       1/ 1    2/ 1    3/ 1    4/ 1

KEY NO. E-MOD      THK.      HZ       VC L.LEVEL R.LEVEL    POIS
  1  0.30E+04    5.00    30.00    0.00    2.50    2.50    0.00

LOAD DATA
      UNIT OF FORCES                          =  KIPS
      NUMBER OF LOAD                          =  1
      NUMBER OF HARMONICS                     =  49 @ 2

LOAD ON BEAM NUMBER                           =  3
      LOAD MAGNITUDE                          =  100
      WIDTH OF LOAD                           =  0
      LENGTH OF LOAD                          =  5
      LONGITUDINAL POSITION OF LOAD CENTROID  =  120
      LOAD ECCENTRICITY                       =  0
      LOAD TYPE                               =  CONCEN
```

****** DISPLACEMENTS OF BEAMS AT C.G. ******

BEAM No.= 1

AT POINT	LONGITUDINAL	HORIZONTAL	VERTICAL	ROTATION
0.000L	-1.613E-03	0.000E+00	0.000E+00	0.000E+00
0.100L	-1.537E-03	-4.395E-03	2.994E-02	5.891E-04
0.200L	-1.314E-03	-8.422E-03	5.685E-02	1.120E-03
0.300L	-9.649E-04	-1.171E-02	7.808E-02	1.539E-03
0.400L	-5.126E-04	-1.387E-02	9.162E-02	1.805E-03
0.500L	7.089E-11	-1.463E-02	9.626E-02	1.897E-03
0.600L	5.126E-04	-1.387E-02	9.162E-02	1.805E-03
0.700L	9.649E-04	-1.171E-02	7.808E-02	1.539E-03
0.800L	1.314E-03	-8.422E-03	5.685E-02	1.120E-03
0.900L	1.537E-03	-4.395E-03	2.994E-02	5.891E-04
1.000L	1.613E-03	1.265E-09	-8.438E-09	-1.666E-10

****** DISPLACEMENTS OF BEAMS AT C.G. ******

BEAM No.= 2

AT POINT	LONGITUDINAL	HORIZONTAL	VERTICAL	ROTATION
0.000L	-8.081E-03	0.000E+00	0.000E+00	0.000E+00
0.100L	-7.707E-03	-5.812E-03	5.931E-02	7.788E-04
0.200L	-6.607E-03	-1.143E-02	1.134E-01	1.526E-03
0.300L	-4.852E-03	-1.649E-02	1.573E-01	2.186E-03
0.400L	-2.587E-03	-2.024E-02	1.860E-01	2.660E-03
0.500L	3.532E-10	-2.162E-02	1.960E-01	2.824E-03
0.600L	2.587E-03	-2.024E-02	1.860E-01	2.660E-03
0.700L	4.852E-03	-1.649E-02	1.573E-01	2.186E-03
0.800L	6.607E-03	-1.143E-02	1.134E-01	1.526E-03
0.900L	7.707E-03	-5.812E-03	5.931E-02	7.788E-04
1.000L	8.081E-03	1.774E-09	-1.699E-08	-2.344E-10

****** DISPLACEMENTS OF BEAMS AT C.G. ******

BEAM No.= 3

AT POINT	LONGITUDINAL	HORIZONTAL	VERTICAL	ROTATION
0.000L	-1.245E-02	0.000E+00	0.000E+00	0.000E+00
0.100L	-1.210E-02	-9.116E-09	7.802E-02	8.825E-10
0.200L	-1.097E-02	-1.732E-08	1.514E-01	1.671E-09
0.300L	-8.861E-03	-2.381E-08	2.149E-01	2.288E-09
0.400L	-5.372E-03	-2.796E-08	2.615E-01	2.679E-09
0.500L	5.263E-10	-2.940E-08	2.804E-01	2.812E-09
0.600L	5.372E-03	-2.796E-08	2.615E-01	2.679E-09
0.700L	8.861E-03	-2.381E-08	2.149E-01	2.288E-09
0.800L	1.097E-02	-1.732E-08	1.514E-01	1.671E-09
0.900L	1.210E-02	-9.116E-09	7.802E-02	8.825E-10
1.000L	1.245E-02	2.572E-15	-2.338E-08	-2.471E-16

****** DISPLACEMENTS OF BEAMS AT C.G. ******

BEAM No.= 4

AT POINT	LONGITUDINAL	HORIZONTAL	VERTICAL	ROTATION
0.000L	-8.081E-03	0.000E+00	0.000E+00	0.000E+00
0.100L	-7.707E-03	5.812E-03	5.932E-02	-7.788E-04
0.200L	-6.607E-03	1.143E-02	1.134E-01	-1.526E-03
0.300L	-4.852E-03	1.649E-02	1.573E-01	-2.186E-03
0.400L	-2.587E-03	2.024E-02	1.860E-01	-2.660E-03
0.500L	3.532E-10	2.162E-02	1.960E-01	-2.824E-03
0.600L	2.587E-03	2.024E-02	1.860E-01	-2.660E-03
0.700L	4.852E-03	1.649E-02	1.573E-01	-2.186E-03
0.800L	6.607E-03	1.143E-02	1.134E-01	-1.526E-03
0.900L	7.707E-03	5.812E-03	5.932E-02	-7.788E-04
1.000L	8.081E-03	-1.774E-09	-1.699E-08	2.344E-10

****** DISPLACEMENTS OF BEAMS AT C.G. ******

BEAM No.= 5

AT POINT	LONGITUDINAL	HORIZONTAL	VERTICAL	ROTATION
0.000L	-1.613E-03	0.000E+00	0.000E+00	0.000E+00
0.100L	-1.537E-03	4.395E-03	2.994E-02	-5.891E-04
0.200L	-1.314E-03	8.422E-03	5.685E-02	-1.120E-03
0.300L	-9.649E-04	1.171E-02	7.808E-02	-1.539E-03
0.400L	-5.126E-04	1.387E-02	9.162E-02	-1.805E-03
0.500L	7.089E-11	1.463E-02	9.626E-02	-1.897E-03
0.600L	5.126E-04	1.387E-02	9.162E-02	-1.805E-03
0.700L	9.649E-04	1.171E-02	7.808E-02	-1.539E-03
0.800L	1.314E-03	8.422E-03	5.685E-02	-1.120E-03
0.900L	1.537E-03	4.395E-03	2.994E-02	-5.891E-04
1.000L	1.613E-03	-1.265E-09	-8.438E-09	1.666E-10

****** BEAM FORCES ******

BEAM No.= 1

AT POINT	LONGITUDINAL	HORIZONTAL	VERTICAL	TORSION	M-ZZ	M-YY
0.000 L	0.000E+00	-9.377E-01	5.703E+00	1.715E+02	0.000E+00	0.000E+00
0.100 L	3.796E+00	-8.974E-01	5.382E+00	1.630E+02	-3.196E+00	1.058E+02
0.200 L	7.237E+00	-8.011E-01	4.478E+00	1.383E+02	-6.441E+00	1.994E+02
0.300 L	1.014E+01	-6.760E-01	3.150E+00	9.952E+01	-9.726E+00	2.697E+02
0.400 L	1.231E+01	-4.081E-01	1.616E+00	5.189E+01	-1.244E+01	3.109E+02
0.500 L	1.304E+01	4.852E-08	-2.414E-07	-7.415E-06	-1.322E+01	3.250E+02
0.600 L	1.231E+01	4.081E-01	-1.616E+00	-5.189E+01	-1.244E+01	3.109E+02
0.700 L	1.014E+01	6.760E-01	-3.150E+00	-9.952E+01	-9.726E+00	2.697E+02
0.800 L	7.237E+00	8.011E-01	-4.478E+00	-1.383E+02	-6.441E+00	1.994E+02
0.900 L	3.796E+00	8.974E-01	-5.382E+00	-1.630E+02	-3.196E+00	1.058E+02
1.000 L	-1.069E-06	9.377E-01	-5.703E+00	-1.715E+02	9.941E-07	-2.936E-05

****** BEAM FORCES ******

BEAM No.= 2

AT POINT	LONGITUDINAL	HORIZONTAL	VERTICAL	TORSION	M-ZZ	M-YY
0.000 L	0.000E+00	1.206E+00	1.336E+01	2.243E+02	0.000E+00	0.000E+00
0.100 L	1.859E+01	1.166E+00	1.321E+01	2.202E+02	-1.542E+00	1.802E+02
0.200 L	3.613E+01	9.777E-01	1.251E+01	2.048E+02	-4.644E+00	3.589E+02
0.300 L	5.102E+01	4.419E-01	1.055E+01	1.684E+02	-1.095E+01	5.273E+02
0.400 L	6.138E+01	-6.901E-01	6.443E+00	9.641E+01	-2.113E+01	6.585E+02
0.500 L	6.738E+01	-2.815E-07	-6.269E-07	-1.180E-05	-2.178E+01	6.943E+02
0.600 L	6.138E+01	6.901E-01	-6.443E+00	-9.641E+01	-2.113E+01	6.585E+02
0.700 L	5.102E+01	-4.419E-01	-1.055E+01	-1.684E+02	-1.095E+01	5.273E+02
0.800 L	3.613E+01	-9.777E-01	-1.251E+01	-2.048E+02	-4.644E+00	3.589E+02
0.900 L	1.859E+01	-1.166E+00	-1.321E+01	-2.202E+02	-1.542E+00	1.802E+02
1.000 L	-5.707E-06	-1.206E+00	-1.336E+01	-2.243E+02	1.152E-06	-5.575E-05

****** BEAM FORCES ******

BEAM No.= 3

AT POINT	LONGITUDINAL	HORIZONTAL	VERTICAL	TORSION	M-ZZ	M-YY
0.000 L	0.000E+00	1.091E-05	1.226E+01	2.574E-04	0.000E+00	0.000E+00
0.100 L	1.789E+01	1.100E-05	1.241E+01	2.434E-04	-8.012E-06	1.582E+02
0.200 L	3.918E+01	1.074E-05	1.651E+01	2.044E-04	-1.501E-05	3.392E+02
0.300 L	6.800E+01	8.766E-06	2.194E+01	1.461E-04	-2.039E-05	5.785E+02
0.400 L	1.088E+02	4.997E-06	3.512E+01	7.593E-05	-2.386E-05	9.405E+02
0.500 L	1.380E+02	-5.732E-13	1.243E-05	-1.107E-11	-2.507E-05	1.500E+03
0.600 L	1.088E+02	-4.997E-06	-3.512E+01	-7.593E-05	-2.386E-05	9.405E+02
0.700 L	6.800E+01	-8.766E-06	-2.194E+01	-1.461E-04	-2.039E-05	5.785E+02
0.800 L	3.918E+01	-1.074E-05	-1.651E+01	-2.044E-04	-1.501E-05	3.392E+02
0.900 L	1.789E+01	-1.100E-05	-1.241E+01	-2.434E-04	-8.012E-06	1.582E+02
1.000 L	-1.013E-05	-1.091E-05	-1.226E+01	-2.574E-04	2.155E-12	-9.732E-05

****** BEAM FORCES ******

BEAM No.= 4

AT POINT	LONGITUDINAL	HORIZONTAL	VERTICAL	TORSION	M-ZZ	M-YY
0.000 L	0.000E+00	-1.206E+00	1.336E+01	-2.243E+02	0.000E+00	0.000E+00
0.100 L	1.859E+01	-1.166E+00	1.321E+01	-2.202E+02	1.542E+00	1.802E+02
0.200 L	3.613E+01	-9.778E-01	1.251E+01	-2.048E+02	4.644E+00	3.589E+02
0.300 L	5.102E+01	-4.420E-01	1.055E+01	-1.684E+02	1.095E+01	5.273E+02
0.400 L	6.138E+01	6.901E-01	6.443E+00	-9.641E+01	2.113E+01	6.585E+02
0.500 L	6.738E+01	2.815E-07	-6.269E-07	1.180E-05	2.178E+01	6.943E+02
0.600 L	6.138E+01	-6.901E-01	-6.443E+00	9.641E+01	2.113E+01	6.585E+02
0.700 L	5.102E+01	4.420E-01	-1.055E+01	1.684E+02	1.095E+01	5.273E+02
0.800 L	3.613E+01	9.778E-01	-1.251E+01	2.048E+02	4.644E+00	3.589E+02
0.900 L	1.859E+01	1.166E+00	-1.321E+01	2.202E+02	1.542E+00	1.802E+02
1.000 L	-5.707E-06	1.206E+00	-1.336E+01	2.243E+02	-1.152E-06	-5.575E-05

****** BEAM FORCES ******

BEAM No.= 5

AT POINT	LONGITUDINAL	HORIZONTAL	VERTICAL	TORSION	M-ZZ	M-YY
0.000 L	0.000E+00	9.378E-01	5.703E+00	-1.715E+02	0.000E+00	0.000E+00
0.100 L	3.796E+00	8.975E-01	5.382E+00	-1.630E+02	3.196E+00	1.058E+02
0.200 L	7.237E+00	8.011E-01	4.478E+00	-1.383E+02	6.441E+00	1.994E+02
0.300 L	1.014E+01	6.761E-01	3.150E+00	-9.952E+01	9.726E+00	2.697E+02
0.400 L	1.231E+01	4.081E-01	1.616E+00	-5.189E+01	1.244E+01	3.109E+02
0.500 L	1.304E+01	-4.552E-08	-2.414E-07	7.415E-06	1.322E+01	3.250E+02
0.600 L	1.231E+01	-4.081E-01	-1.616E+00	5.189E+01	1.244E+01	3.109E+02
0.700 L	1.014E+01	-6.761E-01	-3.150E+00	9.952E+01	9.726E+00	2.697E+02
0.800 L	7.237E+00	-8.011E-01	-4.478E+00	1.383E+02	6.441E+00	1.994E+02
0.900 L	3.796E+00	-8.975E-01	-5.382E+00	1.630E+02	3.196E+00	1.058E+02
1.000 L	-1.069E-06	-9.378E-01	-5.703E+00	1.715E+02	-9.941E-07	-2.936E-05

****** FIBER STRESS OF BEAM ******

BEAM No. 1

AT POINT	-5.00 0.00	5.00 0.00	5.00 20.00	-5.00 20.00
0.000L	0.000E+00	0.000E+00	0.000E+00	0.000E+00
0.100L	-1.681E-01	-1.873E-01	1.302E-01	1.493E-01
0.200L	-3.159E-01	-3.546E-01	2.435E-01	2.822E-01
0.300L	-4.261E-01	-4.845E-01	3.247E-01	3.831E-01
0.400L	-4.906E-01	-5.652E-01	3.675E-01	4.422E-01
0.500L	-5.130E-01	-5.923E-01	3.825E-01	4.619E-01
0.600L	-4.906E-01	-5.652E-01	3.675E-01	4.422E-01
0.700L	-4.261E-01	-4.845E-01	3.247E-01	3.831E-01
0.800L	-3.159E-01	-3.546E-01	2.435E-01	2.822E-01
0.900L	-1.681E-01	-1.873E-01	1.302E-01	1.493E-01
1.000L	4.641E-08	5.237E-08	-3.572E-08	-4.169E-08

****** FIBER STRESS OF BEAM ******

BEAM No. 2

AT POINT	-5.00 0.00	5.00 0.00	5.00 20.00	-5.00 20.00
0.000L	0.000E+00	0.000E+00	0.000E+00	0.000E+00
0.100L	-3.585E-01	-3.678E-01	1.727E-01	1.819E-01
0.200L	-7.050E-01	-7.329E-01	3.438E-01	3.716E-01
0.300L	-1.013E+00	-1.079E+00	5.029E-01	5.687E-01
0.400L	-1.231E+00	-1.358E+00	6.174E-01	7.442E-01
0.500L	-1.313E+00	-1.444E+00	6.392E-01	7.699E-01
0.600L	-1.231E+00	-1.358E+00	6.174E-01	7.442E-01
0.700L	-1.013E+00	-1.079E+00	5.029E-01	5.687E-01
0.800L	-7.050E-01	-7.329E-01	3.438E-01	3.716E-01
0.900L	-3.585E-01	-3.678E-01	1.727E-01	1.819E-01
1.000L	1.087E-07	1.156E-07	-5.163E-08	-5.854E-08

****** FIBER STRESS OF BEAM ******

BEAM No. 3

AT POINT	-5.00 0.00	5.00 0.00	5.00 20.00	-5.00 20.00
0.000L	0.000E+00	0.000E+00	0.000E+00	0.000E+00
0.100L	-3.267E-01	-3.267E-01	1.478E-01	1.478E-01
0.200L	-7.048E-01	-7.048E-01	3.129E-01	3.129E-01
0.300L	-1.208E+00	-1.208E+00	5.277E-01	5.277E-01
0.400L	-1.955E+00	-1.955E+00	8.669E-01	8.669E-01
0.500L	-3.041E+00	-3.041E+00	1.460E+00	1.460E+00
0.600L	-1.955E+00	-1.955E+00	8.669E-01	8.669E-01
0.700L	-1.208E+00	-1.208E+00	5.277E-01	5.277E-01
0.800L	-7.048E-01	-7.048E-01	3.129E-01	3.129E-01
0.900L	-3.267E-01	-3.267E-01	1.478E-01	1.478E-01
1.000L	1.966E-07	1.966E-07	-9.533E-08	-9.533E-08

****** FIBER STRESS OF BEAM ******

BEAM No. 4

AT POINT	-5.00 0.00	5.00 0.00	5.00 20.00	-5.00 20.00
0.000L	0.000E+00	0.000E+00	0.000E+00	0.000E+00
0.100L	-3.678E-01	-3.585E-01	1.819E-01	1.727E-01
0.200L	-7.329E-01	-7.050E-01	3.716E-01	3.438E-01
0.300L	-1.079E+00	-1.013E+00	5.687E-01	5.029E-01
0.400L	-1.358E+00	-1.231E+00	7.442E-01	6.174E-01
0.500L	-1.444E+00	-1.313E+00	7.699E-01	6.392E-01
0.600L	-1.358E+00	-1.231E+00	7.442E-01	6.174E-01
0.700L	-1.079E+00	-1.013E+00	5.687E-01	5.029E-01
0.800L	-7.329E-01	-7.050E-01	3.716E-01	3.438E-01
0.900L	-3.678E-01	-3.585E-01	1.819E-01	1.727E-01
1.000L	1.136E-07	1.087E-07	-5.854E-08	-5.163E-08

****** FIBER STRESS OF BEAM ******

BEAM No. 5

AT POINT	-5.00 0.00	5.00 0.00	5.00 20.00	-5.00 20.00
0.000L	0.000E+00	0.000E+00	0.000E+00	0.000E+00
0.100L	-1.373E-01	-1.681E-01	1.493E-01	1.302E-01
0.200L	-3.546E-01	-3.159E-01	2.822E-01	2.435E-01
0.300L	-4.845E-01	-4.261E-01	3.831E-01	3.247E-01
0.400L	-5.652E-01	-4.906E-01	4.422E-01	3.675E-01
0.500L	-5.923E-01	-5.130E-01	4.619E-01	3.825E-01
0.600L	-5.652E-01	-4.906E-01	4.422E-01	3.675E-01
0.700L	-4.845E-01	-4.261E-01	3.831E-01	3.247E-01
0.800L	-3.546E-01	-3.159E-01	2.822E-01	2.435E-01
0.900L	-1.373E-01	-1.681E-01	1.493E-01	1.302E-01
1.000L	5.237E-08	4.641E-08	-4.169E-08	-3.572E-08

****** INTERNAL FORCES OF SHEAR KEY ******

LEFT SHEAR KEYS NO. 1

AT POINT	LONGITUDINAL	HORIZONTAL	VERTICAL	ROTATION
0.000L	1.610E-01	0.000E+00	0.000E+00	0.000E+00
0.100L	1.527E-01	3.165E-03	-2.631E-02	-5.923E-01
0.200L	1.329E-01	4.553E-03	-4.793E-02	-1.142E+00
0.300L	1.085E-01	6.626E-03	-6.106E-02	-1.590E+00
0.400L	6.592E-02	1.715E-02	-6.586E-02	-1.879E+00
0.500L	-7.710E-09	9.083E-03	-6.863E-02	-1.996E+00
0.600L	-6.592E-02	1.715E-02	-6.586E-02	-1.879E+00
0.700L	-1.085E-01	6.626E-03	-6.106E-02	-1.590E+00
0.800L	-1.329E-01	4.553E-03	-4.793E-02	-1.142E+00
0.900L	-1.527E-01	3.165E-03	-2.631E-02	-5.923E-01
1.000L	-1.610E-01	7.314E-10	6.964E-09	1.752E-07

****** INTERNAL FORCES OF SHEAR KEY ******

RIGHT SHEAR KEY NO. 1

AT POINT	LONGITUDINAL	HORIZONTAL	VERTICAL	ROTATION
0.000L	5.164E-01	0.000E+00	0.000E+00	0.000E+00
0.100L	5.057E-01	9.106E-03	2.631E-02	-1.970E-01
0.200L	4.610E-01	3.738E-02	4.793E-02	-2.964E-01
0.300L	3.477E-01	7.825E-02	6.106E-02	-2.420E-01
0.400L	1.381E-01	6.932E-02	6.586E-02	-9.686E-02
0.500L	-3.720E-08	-2.245E-02	6.863E-02	-6.344E-02
0.600L	-1.381E-01	6.932E-02	6.586E-02	-9.686E-02
0.700L	-3.477E-01	7.825E-02	6.106E-02	-2.420E-01
0.800L	-4.610E-01	3.738E-02	4.793E-02	-2.964E-01
0.900L	-5.057E-01	9.106E-03	2.631E-02	-1.970E-01
1.000L	-5.164E-01	1.242E-09	-6.964E-09	3.374E-08

****** INTERNAL FORCES OF SHEAR KEY ******

LEFT SHEAR KEYS NO. 2

AT POINT	LONGITUDINAL	HORIZONTAL	VERTICAL	ROTATION
0.000L	2.664E-01	0.000E+00	0.000E+00	0.000E+00
0.100L	2.533E-01	-1.299E-02	-4.068E-02	2.011E-01
0.200L	2.309E-01	-5.046E-02	-9.722E-02	1.308E-01
0.300L	1.860E-01	-1.125E-01	-1.817E-01	-4.483E-01
0.400L	1.928E-01	-1.222E-01	-2.903E-01	-1.584E+00
0.500L	5.830E-08	2.218E-01	-3.638E-01	-2.514E+00
0.600L	-1.928E-01	-1.222E-01	-2.903E-01	-1.584E+00
0.700L	-1.860E-01	-1.125E-01	-1.817E-01	-4.483E-01
0.800L	-2.309E-01	-5.046E-02	-9.722E-02	1.308E-01
0.900L	-2.533E-01	-1.299E-02	-4.068E-02	2.011E-01
1.000L	-2.664E-01	-1.541E-08	2.212E-08	8.754E-08

****** INTERNAL FORCES OF SHEAR KEY ******

RIGHT SHEAR KEY NO. 2

AT POINT	LONGITUDINAL	HORIZONTAL	VERTICAL	ROTATION
0.000L	3.702E-01	0.000E+00	0.000E+00	0.000E+00
0.100L	3.362E-01	-4.213E-02	4.068E-02	-1.422E+00
0.200L	5.170E-01	-6.081E-02	9.722E-02	-3.048E+00
0.300L	6.964E-01	-1.907E-02	1.817E-01	-5.002E+00
0.400L	1.019E+00	1.632E-01	2.903E-01	-7.126E+00
0.500L	2.891E-07	6.565E-01	3.638E-01	-8.398E+00
0.600L	-1.019E+00	1.632E-01	2.903E-01	-7.126E+00
0.700L	-6.964E-01	-1.907E-02	1.817E-01	-5.002E+00
0.800L	-5.170E-01	-6.081E-02	9.722E-02	-3.048E+00
0.900L	-3.362E-01	-4.213E-02	4.068E-02	-1.422E+00
1.000L	-3.702E-01	-3.139E-08	-2.212E-08	5.760E-07

****** INTERNAL FORCES OF SHEAR KEY ******

LEFT SHEAR KEYS NO. 3

AT POINT	LONGITUDINAL	HORIZONTAL	VERTICAL	ROTATION
0.000L	3.702E-01	0.000E+00	0.000E+00	0.000E+00
0.100L	3.862E-01	4.213E-02	4.068E-02	1.422E+00
0.200L	5.170E-01	6.081E-02	9.722E-02	3.048E+00
0.300L	6.964E-01	1.907E-02	1.817E-01	5.002E+00
0.400L	1.019E+00	-1.632E-01	2.903E-01	7.126E+00
0.500L	2.891E-07	-6.565E-01	3.638E-01	8.398E+00
0.600L	-1.019E+00	-1.632E-01	2.903E-01	7.126E+00
0.700L	-6.964E-01	1.907E-02	1.817E-01	5.002E+00
0.800L	-5.170E-01	6.081E-02	9.722E-02	3.048E+00
0.900L	-3.862E-01	4.213E-02	4.068E-02	1.422E+00
1.000L	-3.702E-01	3.139E-08	-2.212E-08	-5.760E-07

****** INTERNAL FORCES OF SHEAR KEY ******

RIGHT SHEAR KEY NO. 3

AT POINT	LONGITUDINAL	HORIZONTAL	VERTICAL	ROTATION
0.000L	2.664E-01	0.000E+00	0.000E+00	0.000E+00
0.100L	2.533E-01	1.299E-02	-4.068E-02	-2.011E-01
0.200L	2.309E-01	5.046E-02	-9.722E-02	-1.309E-01
0.300L	1.860E-01	1.125E-01	-1.817E-01	4.483E-01
0.400L	1.928E-01	1.222E-01	-2.903E-01	1.584E+00
0.500L	5.830E-08	-2.218E-01	-3.638E-01	2.514E+00
0.600L	-1.928E-01	1.222E-01	-2.903E-01	1.584E+00
0.700L	-1.860E-01	1.125E-01	-1.817E-01	4.483E-01
0.800L	-2.309E-01	5.046E-02	-9.722E-02	-1.309E-01
0.900L	-2.533E-01	1.299E-02	-4.068E-02	-2.011E-01
1.000L	-2.664E-01	1.541E-08	2.312E-08	-8.754E-08

****** INTERNAL FORCES OF SHEAR KEY ******

LEFT SHEAR KEYS NO. 4

AT POINT	LONGITUDINAL	HORIZONTAL	VERTICAL	ROTATION
0.000L	5.164E-01	0.000E+00	0.000E+00	0.000E+00
0.100L	5.057E-01	-9.106E-03	2.631E-02	1.970E-01
0.200L	4.610E-01	-3.738E-02	4.793E-02	2.964E-01
0.300L	3.477E-01	-7.825E-02	6.106E-02	2.420E-01
0.400L	1.381E-01	-6.932E-02	6.586E-02	9.686E-02
0.500L	-3.720E-08	2.245E-02	6.863E-02	6.344E-02
0.600L	-1.381E-01	-6.932E-02	6.586E-02	9.686E-02
0.700L	-3.477E-01	-7.825E-02	6.106E-02	2.420E-01
0.800L	-4.610E-01	-3.738E-02	4.793E-02	2.964E-01
0.900L	-5.057E-01	-9.106E-03	2.631E-02	1.970E-01
1.000L	-5.164E-01	-1.242E-09	-6.964E-09	-3.374E-08

****** INTERNAL FORCES OF SHEAR KEY ******

RIGHT SHEAR KEY NO. 4

AT POINT	LONGITUDINAL	HORIZONTAL	VERTICAL	ROTATION
0.000L	1.610E-01	0.000E+00	0.000E+00	0.000E+00
0.100L	1.527E-01	-3.165E-03	-2.631E-02	5.923E-01
0.200L	1.329E-01	-4.553E-03	-4.793E-02	1.142E+00
0.300L	1.085E-01	-6.627E-03	-6.106E-02	1.590E+00
0.400L	6.592E-02	-1.716E-02	-6.586E-02	1.879E+00
0.500L	-7.710E-09	-9.084E-03	-6.863E-02	1.996E+00
0.600L	-6.592E-02	-1.716E-02	-6.586E-02	1.879E+00
0.700L	-1.085E-01	-6.627E-03	-6.106E-02	1.590E+00
0.800L	-1.329E-01	-4.553E-03	-4.793E-02	1.142E+00
0.900L	-1.527E-01	-3.165E-03	-2.631E-02	5.923E-01
1.000L	-1.610E-01	-7.314E-10	6.964E-09	-1.752E-07

```
*****************************************************************
              OUTPUT RESULTS OF MULTIBEAM STRUCTURES
DATE     : 06-15-1995            PROJECT TITLE : CENTER PORT BRIDGE
FILENAME : TRUSS               ENGINEER      : N.SOMCHAI
*****************************************************************

STRUCTURE IDENTIFICATION
         NO. OF BEAMS          =          9
         NO. OF BEAM TYPE      =          1
         SPAN LENGTH           =          384
         UNIT OF LENGTH        =          INCHES

BEAM TYPE DISTRIBUTION    [ BEAM NO./BEAM TYPE ]
          1/ 1     2/ 1     3/ 1     4/ 1     5/ 1     6/ 1     7/ 1
          8/ 1     9/ 1

BEAM TYPE    1 (BOX SECTION)
        DIMENSION                   :
        (1)     =     36.000        :        E-MOD    = 0.58E+04
        (2)     =     11.000        :        POIS     = 0
        (3)     =     21.000        :        AREA     = 492
        (4)     =     12.000        :        I-Y      = 24615
        (5)     =      0.000        :        I-Z      = 57602
        (6)     =      0.000        :        J        = 28549.24
     (BOXES)    =         2         :        C        = 2900

TRUSS TYPE SHEAR KEY
        NO. OF SHEAR KEY    =            2

SHEAR KEY TYPE DISTRIBUTION    [ SHEAR KEY NO./SHEAR KEY TYPE ]
        1/ 1     2/ 1     3/ 1     4/ 1     5/ 2     6/ 2     7/ 2
        8/ 2

KEY NO. E-MOD      THK.      HZ       VC  L.LEVEL R.LEVEL      KX       KO
  1   0.2E+04    1.00     0.75     3.50     8.75     5.25 0.0E+00 0.0E+00
  2   0.2E+04    1.00     0.75    -3.50     5.25     8.75 0.0E+00 0.0E+00

LOAD DATA
      UNIT OF FORCES                               =  KIPS
      NUMBER OF LOAD                               =  1
      NUMBER OF HARMONICS                          =  49 @ 2

LOAD ON BEAM NUMBER                                =  5
      LOAD MAGNITUDE                               =  47.7
      WIDTH OF LOAD                                =  0
      LENGTH OF LOAD                               =  10
      LONGITUDINAL POSITION OF LOAD CENTROID       =  192
      LOAD ECCENTRICITY                            =  0
      LOAD TYPE                                    =  CONCEN
```

****** DISPLACEMENTS OF BEAMS AT C.G. ******

BEAM No.= 1

AT POINT	LONGITUDINAL	HORIZONTAL	VERTICAL	ROTATION
0.000L	0.000E+00	0.000E+00	0.000E+00	0.000E+00
0.100L	0.000E+00	-7.860E-04	8.583E-03	1.699E-05
0.200L	0.000E+00	-1.496E-03	1.634E-02	3.255E-05
0.300L	0.000E+00	-2.061E-03	2.251E-02	4.520E-05
0.400L	0.000E+00	-2.425E-03	2.648E-02	5.353E-05
0.500L	0.000E+00	-2.551E-03	2.786E-02	5.643E-05
0.600L	0.000E+00	-2.425E-03	2.648E-02	5.353E-05
0.700L	0.000E+00	-2.061E-03	2.251E-02	4.520E-05
0.800L	0.000E+00	-1.496E-03	1.634E-02	3.255E-05
0.900L	0.000E+00	-7.860E-04	8.583E-03	1.699E-05
1.000L	0.000E+00	2.228E-10	-2.433E-09	-4.887E-12

****** DISPLACEMENTS OF BEAMS AT C.G. ******

BEAM No.= 2

AT POINT	LONGITUDINAL	HORIZONTAL	VERTICAL	ROTATION
0.000L	0.000E+00	0.000E+00	0.000E+00	0.000E+00
0.100L	0.000E+00	-9.072E-04	9.906E-03	5.443E-05
0.200L	0.000E+00	-1.729E-03	1.888E-02	1.048E-04
0.300L	0.000E+00	-2.387E-03	2.606E-02	1.464E-04
0.400L	0.000E+00	-2.812E-03	3.071E-02	1.741E-04
0.500L	0.000E+00	-2.959E-03	3.232E-02	1.839E-04
0.600L	0.000E+00	-2.812E-03	3.071E-02	1.741E-04
0.700L	0.000E+00	-2.387E-03	2.606E-02	1.464E-04
0.800L	0.000E+00	-1.729E-03	1.888E-02	1.048E-04
0.900L	0.000E+00	-9.072E-04	9.906E-03	5.443E-05
1.000L	0.000E+00	2.580E-10	-2.817E-09	-1.585E-11

****** DISPLACEMENTS OF BEAMS AT C.G. ******

BEAM No.= 3

AT POINT	LONGITUDINAL	HORIZONTAL	VERTICAL	ROTATION
0.000L	0.000E+00	0.000E+00	0.000E+00	0.000E+00
0.100L	0.000E+00	-1.162E-03	1.268E-02	9.720E-05
0.200L	0.000E+00	-2.224E-03	2.428E-02	1.894E-04
0.300L	0.000E+00	-3.086E-03	3.370E-02	2.693E-04
0.400L	0.000E+00	-3.653E-03	3.988E-02	3.250E-04
0.500L	0.000E+00	-3.850E-03	4.204E-02	3.446E-04
0.600L	0.000E+00	-3.653E-03	3.988E-02	3.250E-04
0.700L	0.000E+00	-3.086E-03	3.370E-02	2.693E-04
0.800L	0.000E+00	-2.224E-03	2.428E-02	1.894E-04
0.900L	0.000E+00	-1.162E-03	1.268E-02	9.720E-05
1.000L	0.000E+00	3.336E-10	-3.642E-09	-2.901E-11

****** DISPLACEMENTS OF BEAMS AT C.G. ******

BEAM No.= 4

AT POINT	LONGITUDINAL	HORIZONTAL	VERTICAL	ROTATION
0.000L	0.000E+00	0.000E+00	0.000E+00	0.000E+00
0.100L	0.000E+00	-1.568E-03	1.712E-02	1.462E-04
0.200L	0.000E+00	-3.023E-03	3.301E-02	2.890E-04
0.300L	0.000E+00	-4.246E-03	4.637E-02	4.230E-04
0.400L	0.000E+00	-5.100E-03	5.569E-02	5.354E-04
0.500L	0.000E+00	-5.417E-03	5.916E-02	5.875E-04
0.600L	0.000E+00	-5.100E-03	5.569E-02	5.354E-04
0.700L	0.000E+00	-4.246E-03	4.637E-02	4.230E-04
0.800L	0.000E+00	-3.023E-03	3.301E-02	2.890E-04
0.900L	0.000E+00	-1.568E-03	1.712E-02	1.462E-04
1.000L	0.000E+00	4.592E-10	-5.015E-09	-4.633E-11

****

****** DISPLACEMENTS OF BEAMS AT C.G. ******

BEAM No.= 5

AT POINT	LONGITUDINAL	HORIZONTAL	VERTICAL	ROTATION
0.000L	0.000E+00	0.000E+00	0.000E+00	0.000E+00
0.100L	0.000E+00	-1.172E-08	2.004E-02	2.446E-09
0.200L	0.000E+00	-2.234E-08	3.876E-02	4.635E-09
0.300L	0.000E+00	-3.084E-08	5.476E-02	6.350E-09
0.400L	0.000E+00	-3.633E-08	6.640E-02	7.436E-09
0.500L	0.000E+00	-3.824E-08	7.124E-02	7.808E-09
0.600L	0.000E+00	-3.633E-08	6.640E-02	7.436E-09
0.700L	0.000E+00	-3.084E-08	5.476E-02	6.350E-09
0.800L	0.000E+00	-2.234E-08	3.876E-02	4.635E-09
0.900L	0.000E+00	-1.172E-08	2.004E-02	2.446E-09
1.000L	0.000E+00	3.334E-15	-5.978E-09	-6.859E-16

****

****** DISPLACEMENTS OF BEAMS AT C.G. ******

BEAM No.= 6

AT POINT	LONGITUDINAL	HORIZONTAL	VERTICAL	ROTATION
0.000L	0.000E+00	0.000E+00	0.000E+00	0.000E+00
0.100L	0.000E+00	1.568E-03	1.712E-02	-1.462E-04
0.200L	0.000E+00	3.023E-03	3.301E-02	-2.890E-04
0.300L	0.000E+00	4.246E-03	4.637E-02	-4.230E-04
0.400L	0.000E+00	5.100E-03	5.569E-02	-5.354E-04
0.500L	0.000E+00	5.417E-03	5.916E-02	-5.875E-04
0.600L	0.000E+00	5.100E-03	5.569E-02	-5.354E-04
0.700L	0.000E+00	4.246E-03	4.637E-02	-4.230E-04
0.800L	0.000E+00	3.023E-03	3.301E-02	-2.890E-04
0.900L	0.000E+00	1.568E-03	1.712E-02	-1.462E-04
1.000L	0.000E+00	-4.592E-10	-5.015E-09	4.633E-11

****

****** DISPLACEMENTS OF BEAMS AT C.G. ******

BEAM No.= 7

AT POINT	LONGITUDINAL	HORIZONTAL	VERTICAL	ROTATION
0.000L	0.000E+00	0.000E+00	0.000E+00	0.000E+00
0.100L	0.000E+00	1.162E-03	1.268E-02	-9.720E-05
0.200L	0.000E+00	2.224E-03	2.428E-02	-1.894E-04
0.300L	0.000E+00	3.086E-03	3.370E-02	-2.693E-04
0.400L	0.000E+00	3.652E-03	3.988E-02	-3.250E-04
0.500L	0.000E+00	3.850E-03	4.204E-02	-3.446E-04
0.600L	0.000E+00	3.652E-03	3.988E-02	-3.250E-04
0.700L	0.000E+00	3.086E-03	3.370E-02	-2.693E-04
0.800L	0.000E+00	2.224E-03	2.428E-02	-1.894E-04
0.900L	0.000E+00	1.162E-03	1.268E-02	-9.720E-05
1.000L	0.000E+00	-3.336E-10	-3.642E-09	2.901E-11

****

****** DISPLACEMENTS OF BEAMS AT C.G. ******

BEAM No.= 8

AT POINT	LONGITUDINAL	HORIZONTAL	VERTICAL	ROTATION
0.000L	0.000E+00	0.000E+00	0.000E+00	0.000E+00
0.100L	0.000E+00	9.072E-04	9.906E-03	-5.443E-05
0.200L	0.000E+00	1.729E-03	1.888E-02	-1.048E-04
0.300L	0.000E+00	2.387E-03	2.606E-02	-1.464E-04
0.400L	0.000E+00	2.812E-03	3.071E-02	-1.741E-04
0.500L	0.000E+00	2.959E-03	3.231E-02	-1.839E-04
0.600L	0.000E+00	2.812E-03	3.071E-02	-1.741E-04
0.700L	0.000E+00	2.387E-03	2.606E-02	-1.464E-04
0.800L	0.000E+00	1.729E-03	1.888E-02	-1.048E-04
0.900L	0.000E+00	9.072E-04	9.906E-03	-5.443E-05
1.000L	0.000E+00	-2.580E-10	-2.817E-09	1.585E-11

****

****** DISPLACEMENTS OF BEAMS AT C.G. ******

BEAM No.= 9

AT POINT	LONGITUDINAL	HORIZONTAL	VERTICAL	ROTATION
0.000L	0.000E+00	0.000E+00	0.000E+00	0.000E+00
0.100L	0.000E+00	7.859E-04	8.583E-03	-1.699E-05
0.200L	0.000E+00	1.496E-03	1.634E-02	-3.255E-05
0.300L	0.000E+00	2.061E-03	2.251E-02	-4.520E-05
0.400L	0.000E+00	2.425E-03	2.648E-02	-5.353E-05
0.500L	0.000E+00	2.551E-03	2.786E-02	-5.643E-05
0.600L	0.000E+00	2.425E-03	2.648E-02	-5.353E-05
0.700L	0.000E+00	2.061E-03	2.251E-02	-4.520E-05
0.800L	0.000E+00	1.496E-03	1.634E-02	-3.255E-05
0.900L	0.000E+00	7.859E-04	8.583E-03	-1.699E-05
1.000L	0.000E+00	-2.228E-10	-2.433E-09	4.887E-12

****

****** BEAM FORCES ******

BEAM No.= 1

AT POINT	LONGITUDINAL	HORIZONTAL	VERTICAL	TORSION	M-ZZ	M-YY
0.000 L	0.000E+00	-4.563E-01	2.129E+00	3.753E+01	0.000E+00	0.000E+00
0.100 L	0.000E+00	-4.376E-01	2.042E+00	3.599E+01	-1.728E+01	8.065E+01
0.200 L	0.000E+00	-3.802E-01	1.774E+00	3.127E+01	-3.311E+01	1.545E+02
0.300 L	0.000E+00	-2.838E-01	1.324E+00	2.334E+01	-4.598E+01	2.146E+02
0.400 L	0.000E+00	-1.521E-01	7.098E-01	1.251E+01	-5.445E+01	2.541E+02
0.500 L	0.000E+00	2.055E-08	-9.590E-08	-1.690E-06	-5.740E+01	2.679E+02
0.600 L	0.000E+00	1.521E-01	-7.098E-01	-1.251E+01	-5.445E+01	2.541E+02
0.700 L	0.000E+00	2.838E-01	-1.324E+00	-2.334E+01	-4.598E+01	2.146E+02
0.800 L	0.000E+00	3.802E-01	-1.774E+00	-3.127E+01	-3.311E+01	1.545E+02
0.900 L	0.000E+00	4.376E-01	-2.042E+00	-3.599E+01	-1.728E+01	8.065E+01
1.000 L	0.000E+00	4.563E-01	-2.129E+00	-3.753E+01	4.971E-06	-2.320E-05

****

****** BEAM FORCES ******

BEAM No.= 2

AT POINT	LONGITUDINAL	HORIZONTAL	VERTICAL	TORSION	M-ZZ	M-YY
0.000 L	0.000E+00	-5.073E-01	2.368E+00	1.200E+02	0.000E+00	0.000E+00
0.100 L	0.000E+00	-4.949E-01	2.310E+00	1.158E+02	-1.933E+01	9.020E+01
0.200 L	0.000E+00	-4.478E-01	2.090E+00	1.020E+02	-3.758E+01	1.753E+02
0.300 L	0.000E+00	-3.466E-01	1.617E+00	7.717E+01	-5.302E+01	2.474E+02
0.400 L	0.000E+00	-1.941E-01	9.056E-01	4.205E+01	-6.354E+01	2.965E+02
0.500 L	0.000E+00	2.347E-08	-1.095E-07	-5.455E-06	-6.739E+01	3.144E+02
0.600 L	0.000E+00	1.941E-01	-9.056E-01	-4.205E+01	-6.354E+01	2.965E+02
0.700 L	0.000E+00	3.466E-01	-1.617E+00	-7.717E+01	-5.302E+01	2.474E+02
0.800 L	0.000E+00	4.478E-01	-2.090E+00	-1.020E+02	-3.758E+01	1.753E+02
0.900 L	0.000E+00	4.949E-01	-2.310E+00	-1.158E+02	-1.933E+01	9.020E+01
1.000 L	0.000E+00	5.073E-01	-2.368E+00	-1.200E+02	5.763E-06	-2.689E-05

****

****** BEAM FORCES ******

BEAM No.= 3

AT POINT	LONGITUDINAL	HORIZONTAL	VERTICAL	TORSION	M-ZZ	M-YY
0.000 L	0.000E+00	-5.858E-01	2.734E+00	2.134E+02	0.000E+00	0.000E+00
0.100 L	0.000E+00	-5.889E-01	2.748E+00	2.084E+02	-2.253E+01	1.051E+02
0.200 L	0.000E+00	-5.937E-01	2.771E+00	1.908E+02	-4.527E+01	2.112E+02
0.300 L	0.000E+00	-5.449E-01	2.543E+00	1.529E+02	-6.750E+01	3.150E+02
0.400 L	0.000E+00	-3.106E-01	1.450E+00	8.491E+01	-8.462E+01	3.949E+02
0.500 L	0.000E+00	3.647E-08	-1.702E-07	-1.055E-05	-9.031E+01	4.214E+02
0.600 L	0.000E+00	3.106E-01	-1.450E+00	-8.491E+01	-8.462E+01	3.949E+02
0.700 L	0.000E+00	5.449E-01	-2.543E+00	-1.529E+02	-6.750E+01	3.150E+02
0.800 L	0.000E+00	5.937E-01	-2.771E+00	-1.908E+02	-4.527E+01	2.112E+02
0.900 L	0.000E+00	5.889E-01	-2.748E+00	-2.084E+02	-2.253E+01	1.051E+02
1.000 L	0.000E+00	5.858E-01	-2.734E+00	-2.134E+02	7.131E-06	-3.327E-05

****

****** BEAM FORCES ******

BEAM No.= 4

AT POINT	LONGITUDINAL	HORIZONTAL	VERTICAL	TORSION	M-ZZ	M-YY
0.000 L	0.000E+00	-6.570E-01	3.066E+00	3.198E+02	0.000E+00	0.000E+00
0.100 L	0.000E+00	-6.725E-01	3.138E+00	3.162E+02	-2.542E+01	1.186E+02
0.200 L	0.000E+00	-7.322E-01	3.417E+00	3.040E+02	-5.218E+01	2.435E+02
0.300 L	0.000E+00	-9.030E-01	4.214E+00	2.758E+02	-8.307E+01	3.876E+02
0.400 L	0.000E+00	-1.075E+00	5.015E+00	2.010E+02	-1.222E+02	5.701E+02
0.500 L	0.000E+00	-3.668E-08	1.712E-07	-1.079E-05	-1.491E+02	6.958E+02
0.600 L	0.000E+00	1.075E+00	-5.015E+00	-2.010E+02	-1.222E+02	5.701E+02
0.700 L	0.000E+00	9.030E-01	-4.214E+00	-2.758E+02	-8.307E+01	3.876E+02
0.800 L	0.000E+00	7.322E-01	-3.417E+00	-3.040E+02	-5.218E+01	2.435E+02
0.900 L	0.000E+00	6.725E-01	-3.138E+00	-3.162E+02	-2.542E+01	1.186E+02
1.000 L	0.000E+00	6.570E-01	-3.066E+00	-3.198E+02	9.875E-06	-4.608E-05

****

****** BEAM FORCES ******

BEAM No.= 5

AT POINT	LONGITUDINAL	HORIZONTAL	VERTICAL	TORSION	M-ZZ	M-YY
0.000 L	0.000E+00	6.574E-05	3.389E+00	5.425E-03	0.000E+00	0.000E+00
0.100 L	0.000E+00	6.272E-05	3.235E+00	5.137E-03	-2.480E-04	1.265E+02
0.200 L	0.000E+00	5.382E-05	3.910E+00	4.322E-03	-4.855E-04	2.624E+02
0.300 L	0.000E+00	3.942E-05	4.231E+00	3.096E-03	-6.859E-04	4.181E+02
0.400 L	0.000E+00	2.072E-05	8.107E+00	1.607E-03	-8.212E-04	6.324E+02
0.500 L	0.000E+00	-2.926E-12	5.307E-06	-2.340E-10	-8.698E-04	1.119E+03
0.600 L	0.000E+00	-2.072E-05	-8.107E+00	-1.607E-03	-8.212E-04	6.324E+02
0.700 L	0.000E+00	-3.942E-05	-4.231E+00	-3.096E-03	-6.859E-04	4.181E+02
0.800 L	0.000E+00	-5.382E-05	-3.910E+00	-4.322E-03	-4.855E-04	2.624E+02
0.900 L	0.000E+00	-6.272E-05	-3.235E+00	-5.137E-03	-2.480E-04	1.265E+02
1.000 L	0.000E+00	-6.574E-05	-3.389E+00	-5.425E-03	7.483E-11	-5.299E-05

****

****** BEAM FORCES ******

BEAM No.= 6

AT POINT	LONGITUDINAL	HORIZONTAL	VERTICAL	TORSION	M-ZZ	M-YY
0.000 L	0.000E+00	6.568E-01	3.065E+00	-3.198E+02	0.000E+00	0.000E+00
0.100 L	0.000E+00	6.723E-01	3.138E+00	-3.162E+02	2.542E+01	1.186E+02
0.200 L	0.000E+00	7.320E-01	3.416E+00	-3.040E+02	5.218E+01	2.435E+02
0.300 L	0.000E+00	9.029E-01	4.213E+00	-2.758E+02	8.307E+01	3.876E+02
0.400 L	0.000E+00	1.075E+00	5.015E+00	-2.010E+02	1.222E+02	5.701E+02
0.500 L	0.000E+00	3.669E-08	1.712E-07	1.079E-05	1.491E+02	6.958E+02
0.600 L	0.000E+00	-1.075E+00	-5.015E+00	2.010E+02	1.222E+02	5.701E+02
0.700 L	0.000E+00	-9.029E-01	-4.213E+00	2.758E+02	8.307E+01	3.876E+02
0.800 L	0.000E+00	-7.320E-01	-3.416E+00	3.040E+02	5.218E+01	2.435E+02
0.900 L	0.000E+00	-6.723E-01	-3.138E+00	3.162E+02	2.542E+01	1.186E+02
1.000 L	0.000E+00	-6.568E-01	-3.065E+00	3.198E+02	-9.875E-06	-4.608E-05

****

****** BEAM FORCES ******

BEAM No.= 7

AT POINT	LONGITUDINAL	HORIZONTAL	VERTICAL	TORSION	M-ZZ	M-YY
0.000 L	0.000E+00	5.858E-01	2.734E+00	-2.135E+02	0.000E+00	0.000E+00
0.100 L	0.000E+00	5.890E-01	2.749E+00	-2.084E+02	2.253E+01	1.051E+02
0.200 L	0.000E+00	5.937E-01	2.771E+00	-1.908E+02	4.526E+01	2.112E+02
0.300 L	0.000E+00	5.449E-01	2.543E+00	-1.529E+02	6.750E+01	3.150E+02
0.400 L	0.000E+00	3.106E-01	1.450E+00	-8.492E+01	8.462E+01	3.949E+02
0.500 L	0.000E+00	-3.647E-08	-1.702E-07	1.055E-05	9.031E+01	4.214E+02
0.600 L	0.000E+00	-3.106E-01	-1.450E+00	8.492E+01	8.462E+01	3.949E+02
0.700 L	0.000E+00	-5.449E-01	-2.543E+00	1.529E+02	6.750E+01	3.150E+02
0.800 L	0.000E+00	-5.937E-01	-2.771E+00	1.908E+02	4.526E+01	2.112E+02
0.900 L	0.000E+00	-5.890E-01	-2.749E+00	2.084E+02	2.253E+01	1.051E+02
1.000 L	0.000E+00	-5.858E-01	-2.734E+00	2.135E+02	-7.131E-06	-3.327E-05

****

****** BEAM FORCES ******

BEAM No.= 8

AT POINT	LONGITUDINAL	HORIZONTAL	VERTICAL	TORSION	M-ZZ	M-YY
0.000 L	0.000E+00	5.075E-01	2.368E+00	-1.200E+02	0.000E+00	0.000E+00
0.100 L	0.000E+00	4.950E-01	2.310E+00	-1.158E+02	1.933E+01	9.020E+01
0.200 L	0.000E+00	4.479E-01	2.090E+00	-1.020E+02	3.758E+01	1.753E+02
0.300 L	0.000E+00	3.466E-01	1.618E+00	-7.717E+01	5.302E+01	2.474E+02
0.400 L	0.000E+00	1.941E-01	9.057E-01	-4.205E+01	6.354E+01	2.965E+02
0.500 L	0.000E+00	-2.348E-08	-1.096E-07	5.455E-06	6.739E+01	3.144E+02
0.600 L	0.000E+00	-1.941E-01	-9.057E-01	4.205E+01	6.354E+01	2.965E+02
0.700 L	0.000E+00	-3.466E-01	-1.618E+00	7.717E+01	5.302E+01	2.474E+02
0.800 L	0.000E+00	-4.479E-01	-2.090E+00	1.020E+02	3.758E+01	1.753E+02
0.900 L	0.000E+00	-4.950E-01	-2.310E+00	1.158E+02	1.933E+01	9.020E+01
1.000 L	0.000E+00	-5.075E-01	-2.368E+00	1.200E+02	-5.763E-06	-2.689E-05

****

****** BEAM FORCES ******

BEAM No.= 9

AT POINT	LONGITUDINAL	HORIZONTAL	VERTICAL	TORSION	M-ZZ	M-YY
0.000 L	0.000E+00	4.563E-01	2.129E+00	-3.753E+01	0.000E+00	0.000E+00
0.100 L	0.000E+00	4.376E-01	2.042E+00	-3.599E+01	1.728E+01	8.065E+01
0.200 L	0.000E+00	3.802E-01	1.774E+00	-3.127E+01	3.311E+01	1.545E+02
0.300 L	0.000E+00	2.838E-01	1.324E+00	-2.334E+01	4.598E+01	2.146E+02
0.400 L	0.000E+00	1.521E-01	7.098E-01	-1.251E+01	5.445E+01	2.541E+02
0.500 L	0.000E+00	-2.055E-08	-9.590E-08	1.690E-06	5.740E+01	2.679E+02
0.600 L	0.000E+00	-1.521E-01	-7.098E-01	1.251E+01	5.445E+01	2.541E+02
0.700 L	0.000E+00	-2.838E-01	-1.324E+00	2.334E+01	4.598E+01	2.146E+02
0.800 L	0.000E+00	-3.802E-01	-1.774E+00	3.127E+01	3.311E+01	1.545E+02
0.900 L	0.000E+00	-4.376E-01	-2.042E+00	3.599E+01	1.728E+01	8.065E+01
1.000 L	0.000E+00	-4.563E-01	-2.129E+00	3.753E+01	-4.971E-06	-2.320E-05

****

****** FIBER STRESS OF BEAM ******

BEAM No. 1

AT POINT	-18.00 0.00	18.00 0.00	18.00 21.00	-18.00 21.00
0.000L	0.000E+00	0.000E+00	0.000E+00	0.000E+00
0.100L	-2.900E-02	-3.980E-02	2.900E-02	3.980E-02
0.200L	-5.556E-02	-7.626E-02	5.556E-02	7.626E-02
0.300L	-7.716E-02	-1.059E-01	7.716E-02	1.059E-01
0.400L	-9.137E-02	-1.254E-01	9.137E-02	1.254E-01
0.500L	-9.632E-02	-1.322E-01	9.632E-02	1.322E-01
0.600L	-9.137E-02	-1.254E-01	9.137E-02	1.254E-01
0.700L	-7.716E-02	-1.059E-01	7.716E-02	1.059E-01
0.800L	-5.556E-02	-7.626E-02	5.556E-02	7.626E-02
0.900L	-2.900E-02	-3.980E-02	2.900E-02	3.980E-02
1.000L	8.342E-09	1.145E-08	-8.342E-09	-1.145E-08

****

****** FIBER STRESS OF BEAM ******

BEAM No. 2

AT POINT	-18.00 0.00	18.00 0.00	18.00 21.00	-18.00 21.00
0.000L	0.000E+00	0.000E+00	0.000E+00	0.000E+00
0.100L	-3.244E-02	-4.452E-02	3.244E-02	4.452E-02
0.200L	-6.305E-02	-8.654E-02	6.305E-02	8.654E-02
0.300L	-8.897E-02	-1.221E-01	8.897E-02	1.221E-01
0.400L	-1.066E-01	-1.463E-01	1.066E-01	1.463E-01
0.500L	-1.131E-01	-1.552E-01	1.131E-01	1.552E-01
0.600L	-1.066E-01	-1.463E-01	1.066E-01	1.463E-01
0.700L	-8.897E-02	-1.221E-01	8.897E-02	1.221E-01
0.800L	-6.305E-02	-8.654E-02	6.305E-02	8.654E-02
0.900L	-3.244E-02	-4.452E-02	3.244E-02	4.452E-02
1.000L	9.670E-09	1.327E-08	-9.670E-09	-1.327E-08

****

****** FIBER STRESS OF BEAM ******

BEAM No. 3

AT POINT	-18.00 0.00	18.00 0.00	18.00 21.00	-18.00 21.00
0.000L	0.000E+00	0.000E+00	0.000E+00	0.000E+00
0.100L	-3.781E-02	-5.189E-02	3.781E-02	5.189E-02
0.200L	-7.595E-02	-1.042E-01	7.595E-02	1.042E-01
0.300L	-1.133E-01	-1.554E-01	1.133E-01	1.554E-01
0.400L	-1.420E-01	-1.949E-01	1.420E-01	1.949E-01
0.500L	-1.515E-01	-2.080E-01	1.515E-01	2.080E-01
0.600L	-1.420E-01	-1.949E-01	1.420E-01	1.949E-01
0.700L	-1.133E-01	-1.554E-01	1.133E-01	1.554E-01
0.300L	-7.595E-02	-1.042E-01	7.595E-02	1.042E-01
0.900L	-3.781E-02	-5.189E-02	3.781E-02	5.189E-02
1.000L	1.197E-08	1.642E-08	-1.197E-08	-1.642E-08

****

****** FIBER STRESS OF BEAM ******

BEAM No. 4

AT POINT	-18.00 0.00	18.00 0.00	18.00 21.00	-18.00 21.00
0.000L	0.000E+00	0.000E+00	0.000E+00	0.000E+00
0.100L	-4.366E-02	-5.854E-02	4.366E-02	5.854E-02
0.200L	-8.756E-02	-1.202E-01	8.756E-02	1.202E-01
0.300L	-1.394E-01	-1.913E-01	1.394E-01	1.913E-01
0.400L	-2.050E-01	-2.813E-01	2.050E-01	2.813E-01
0.500L	-2.502E-01	-3.434E-01	2.502E-01	3.434E-01
0.600L	2.050E-01	-2.813E-01	2.050E-01	2.813E-01
0.700L	-1.394E-01	-1.913E-01	1.394E-01	1.913E-01
0.800L	-8.756E-02	-1.202E-01	8.756E-02	1.202E-01
0.900L	-4.266E-02	-5.854E-02	4.266E-02	5.854E-02
1.000L	1.657E-08	2.274E-08	-1.657E-08	-2.274E-08

****

****** FIBER STRESS OF BEAM ******

BEAM No. 5

AT POINT	-18.00 0.00	18.00 0.00	18.00 21.00	-18.00 21.00
0.000L	0.000E+00	0.000E+00	0.000E+00	0.000E+00
0.100L	-5.398E-02	-5.398E-02	5.398E-02	5.398E-02
0.200L	-1.119E-01	-1.119E-01	1.119E-01	1.119E-01
0.300L	-1.784E-01	-1.784E-01	1.784E-01	1.784E-01
0.400L	-2.698E-01	-2.698E-01	2.698E-01	2.698E-01
0.500L	-4.772E-01	-4.772E-01	4.772E-01	4.772E-01
0.600L	-2.698E-01	-2.698E-01	2.698E-01	2.698E-01
0.700L	-1.784E-01	-1.784E-01	1.784E-01	1.784E-01
0.800L	-1.119E-01	-1.119E-01	1.119E-01	1.119E-01
0.900L	-5.398E-02	-5.398E-02	5.398E-02	5.398E-02
1.000L	3.540E-08	3.540E-08	-3.540E-08	-3.540E-08

****

****** FIBER STRESS OF BEAM ******

BEAM No. 6

AT POINT	-18.00 0.00	18.00 0.00	18.00 21.00	-18.00 21.00
0.000L	0.000E+00	0.000E+00	0.000E+00	0.000E+00
0.100L	-5.854E-02	-4.266E-02	5.854E-02	4.266E-02
0.200L	-1.202E-01	-8.756E-02	1.202E-01	8.756E-02
0.300L	-1.913E-01	-1.394E-01	1.913E-01	1.394E-01
0.400L	-2.813E-01	-2.050E-01	2.813E-01	2.050E-01
0.500L	-3.434E-01	-2.502E-01	3.434E-01	2.502E-01
0.600L	-2.813E-01	-2.050E-01	2.813E-01	2.050E-01
0.700L	-1.913E-01	-1.394E-01	1.913E-01	1.394E-01
0.800L	-1.202E-01	-8.756E-02	1.202E-01	8.756E-02
0.900L	-5.854E-02	-4.266E-02	5.854E-02	4.266E-02
1.000L	2.274E-08	1.657E-08	-2.274E-08	-1.657E-08

****

****** FIBER STRESS OF BEAM ******

BEAM No. 7

AT POINT	-18.00 0.00	18.00 0.00	18.00 21.00	-18.00 21.00
0.000L	0.000E+00	0.000E+00	0.000E+00	0.000E+00
0.100L	-5.189E-02	-3.781E-02	5.189E-02	3.781E-02
0.200L	-1.042E-01	-7.595E-02	1.042E-01	7.595E-02
0.300L	-1.554E-01	-1.133E-01	1.554E-01	1.133E-01
0.400L	-1.949E-01	-1.420E-01	1.949E-01	1.420E-01
0.500L	-2.080E-01	-1.515E-01	2.080E-01	1.515E-01
0.600L	-1.949E-01	-1.420E-01	1.949E-01	1.420E-01
0.700L	-1.554E-01	-1.133E-01	1.554E-01	1.133E-01
0.800L	-1.042E-01	-7.595E-02	1.042E-01	7.595E-02
0.900L	-5.189E-02	-3.781E-02	5.189E-02	3.781E-02
1.000L	1.642E-08	1.197E-08	-1.642E-08	-1.197E-08

****

****** FIBER STRESS OF BEAM ******

BEAM No. 8

AT POINT	-18.00 0.00	18.00 0.00	18.00 21.00	-18.00 21.00
0.000L	0.000E+00	0.000E+00	0.000E+00	0.000E+00
0.100L	-4.452E-02	-3.244E-02	4.452E-02	3.244E-02
0.200L	-8.654E-02	-6.305E-02	8.654E-02	6.305E-02
0.300L	-1.221E-01	-8.897E-02	1.221E-01	8.897E-02
0.400L	-1.463E-01	-1.066E-01	1.463E-01	1.066E-01
0.500L	-1.552E-01	-1.131E-01	1.552E-01	1.131E-01
0.600L	-1.463E-01	-1.066E-01	1.463E-01	1.066E-01
0.700L	-1.221E-01	-8.897E-02	1.221E-01	8.897E-02
0.800L	-8.654E-02	-6.305E-02	8.654E-02	6.305E-02
0.900L	-4.452E-02	-3.244E-02	4.452E-02	3.244E-02
1.000L	1.327E-08	9.670E-09	-1.327E-08	-9.670E-09

****

****** FIBER STRESS OF BEAM ******

BEAM No. 9

AT POINT	-18.00 0.00	18.00 0.00	18.00 21.00	-18.00 21.00
0.000L	0.000E+00	0.000E+00	0.000E+00	0.000E+00
0.100L	-3.980E-02	-2.900E-02	3.980E-02	2.900E-02
0.200L	-7.626E-02	-5.556E-02	7.626E-02	5.556E-02
0.300L	-1.059E-01	-7.716E-02	1.059E-01	7.716E-02
0.400L	-1.254E-01	-9.137E-02	1.254E-01	9.137E-02
0.500L	-1.322E-01	-9.632E-02	1.322E-01	9.632E-02
0.600L	-1.254E-01	-9.137E-02	1.254E-01	9.137E-02
0.700L	-1.059E-01	-7.716E-02	1.059E-01	7.716E-02
0.800L	-7.626E-02	-5.556E-02	7.626E-02	5.556E-02
0.900L	-3.980E-02	-2.900E-02	3.980E-02	2.900E-02
1.000L	1.145E-08	8.341E-09	-1.145E-08	-8.341E-09

****

****** INTERNAL FORCES OF SHEAR KEY ******

SHEAR KEYS NO. 1

AT POINT	LONGITUDINAL	HORIZONTAL	VERTICAL	ROTATION
0.000L	0.000E+00	0.000E+00	0.000E+00	0.000E+00
0.100L	0.000E+00	9.821E-04	-4.583E-03	0.000E+00
0.200L	0.000E+00	2.008E-03	-9.369E-03	0.000E+00
0.300L	0.000E+00	3.003E-03	-1.401E-02	0.000E+00
0.400L	0.000E+00	3.790E-03	-1.769E-02	0.000E+00
0.500L	0.000E+00	4.038E-03	-1.884E-02	0.000E+00
0.600L	0.000E+00	3.790E-03	-1.769E-02	0.000E+00
0.700L	0.000E+00	3.003E-03	-1.401E-02	0.000E+00
0.800L	0.000E+00	2.008E-03	-9.369E-03	0.000E+00
0.900L	0.000E+00	9.821E-04	-4.583E-03	0.000E+00
1.000L	0.000E+00	-3.160E-10	1.475E-09	0.000E+00

****

****** INTERNAL FORCES OF SHEAR KEY ******

SHEAR KEYS NO. 2

AT POINT	LONGITUDINAL	HORIZONTAL	VERTICAL	ROTATION
0.000L	0.000E+00	0.000E+00	0.000E+00	0.000E+00
0.100L	0.000E+00	1.675E-03	-7.815E-03	0.000E+00
0.200L	0.000E+00	3.874E-03	-1.808E-02	0.000E+00
0.300L	0.000E+00	6.389E-03	-2.982E-02	0.000E+00
0.400L	0.000E+00	8.296E-03	-3.871E-02	0.000E+00
0.500L	0.000E+00	9.471E-03	-4.420E-02	0.000E+00
0.600L	0.000E+00	8.296E-03	-3.871E-02	0.000E+00
0.700L	0.000E+00	6.389E-03	-2.982E-02	0.000E+00
0.800L	0.000E+00	3.874E-03	-1.808E-02	0.000E+00
0.900L	0.000E+00	1.675E-03	-7.815E-03	0.000E+00
1.000L	0.000E+00	-7.944E-10	3.707E-09	0.000E+00

****

****** INTERNAL FORCES OF SHEAR KEY ******

SHEAR KEYS NO. 3

AT POINT	LONGITUDINAL	HORIZONTAL	VERTICAL	ROTATION
0.000L	0.000E+00	0.000E+00	0.000E+00	0.000E+00
0.100L	0.000E+00	1.513E-03	-7.060E-03	0.000E+00
0.200L	0.000E+00	3.980E-03	-1.857E-02	0.000E+00
0.300L	0.000E+00	9.570E-03	-4.466E-02	0.000E+00
0.400L	0.000E+00	1.688E-02	-7.875E-02	0.000E+00
0.500L	0.000E+00	1.644E-02	-7.672E-02	0.000E+00
0.600L	0.000E+00	1.688E-02	-7.875E-02	0.000E+00
0.700L	0.000E+00	9.570E-03	-4.466E-02	0.000E+00
0.800L	0.000E+00	3.980E-03	-1.857E-02	0.000E+00
0.900L	0.000E+00	1.513E-03	-7.060E-03	0.000E+00
1.000L	0.000E+00	-2.363E-10	1.103E-09	0.000E+00

****

****** INTERNAL FORCES OF SHEAR KEY ******

SHEAR KEYS NO. 4

AT POINT	LONGITUDINAL	HORIZONTAL	VERTICAL	ROTATION
0.000L	0.000E+00	0.000E+00	0.000E+00	0.000E+00
0.100L	0.000E+00	6.673E-04	-3.114E-03	0.000E+00
0.200L	0.000E+00	1.415E-03	-6.603E-03	0.000E+00
0.300L	0.000E+00	3.078E-03	-1.436E-02	0.000E+00
0.400L	0.000E+00	2.058E-02	-9.604E-02	0.000E+00
0.500L	0.000E+00	6.572E-02	-3.067E-01	0.000E+00
0.600L	0.000E+00	2.058E-02	-9.604E-02	0.000E+00
0.700L	0.000E+00	3.078E-03	-1.436E-02	0.000E+00
0.800L	0.000E+00	1.415E-03	-6.603E-03	0.000E+00
0.900L	0.000E+00	6.673E-04	-3.114E-03	0.000E+00
1.000L	0.000E+00	-5.305E-09	2.569E-08	0.000E+00

****

****** INTERNAL FORCES OF SHEAR KEY ******

SHEAR KEYS NO. 5

AT POINT	LONGITUDINAL	HORIZONTAL	VERTICAL	ROTATION
0.000L	0.000E+00	0.000E+00	0.000E+00	0.000E+00
0.100L	0.000E+00	6.671E-04	3.113E-03	0.000E+00
0.200L	0.000E+00	1.415E-03	6.602E-03	0.000E+00
0.300L	0.000E+00	3.077E-03	1.436E-02	0.000E+00
0.400L	0.000E+00	2.058E-02	9.604E-02	0.000E+00
0.500L	0.000E+00	6.572E-02	3.067E-01	0.000E+00
0.600L	0.000E+00	2.058E-02	9.604E-03	0.000E+00
0.700L	0.000E+00	3.077E-03	1.436E-02	0.000E+00
0.800L	0.000E+00	1.415E-03	6.602E-03	0.000E+00
0.900L	0.000E+00	6.671E-04	3.113E-03	0.000E+00
1.000L	0.000E+00	-5.305E-09	-2.569E-08	0.000E+00

****

****** INTERNAL FORCES OF SHEAR KEY ******

SHEAR KEYS NO. 6

AT POINT	LONGITUDINAL	HORIZONTAL	VERTICAL	ROTATION
0.000L	0.000E+00	0.000E+00	0.000E+00	0.000E+00
0.100L	0.000E+00	1.513E-03	7.061E-03	0.000E+00
0.200L	0.000E+00	3.980E-03	1.858E-02	0.000E+00
0.300L	0.000E+00	9.571E-03	4.467E-02	0.000E+00
0.400L	0.000E+00	1.688E-02	7.876E-02	0.000E+00
0.500L	0.000E+00	1.644E-02	7.672E-02	0.000E+00
0.600L	0.000E+00	1.688E-02	7.876E-02	0.000E+00
0.700L	0.000E+00	9.571E-03	4.467E-02	0.000E+00
0.800L	0.000E+00	3.980E-03	1.858E-02	0.000E+00
0.900L	0.000E+00	1.513E-03	7.061E-03	0.000E+00
1.000L	0.000E+00	-2.364E-10	-1.103E-09	0.000E+00

****

****** INTERNAL FORCES OF SHEAR KEY ******

SHEAR KEYS NO. 7

AT POINT	LONGITUDINAL	HORIZONTAL	VERTICAL	ROTATION
0.000L	0.000E+00	0.000E+00	0.000E+00	0.000E+00
0.100L	0.000E+00	1.675E-03	7.817E-03	0.000E+00
0.200L	0.000E+00	3.874E-03	1.808E-02	0.000E+00
0.300L	0.000E+00	6.390E-03	2.982E-02	0.000E+00
0.400L	0.000E+00	8.297E-03	3.872E-02	0.000E+00
0.500L	0.000E+00	9.472E-03	4.420E-02	0.000E+00
0.600L	0.000E+00	8.297E-03	3.872E-02	0.000E+00
0.700L	0.000E+00	6.390E-03	2.982E-02	0.000E+00
0.800L	0.000E+00	3.874E-03	1.808E-02	0.000E+00
0.900L	0.000E+00	1.675E-03	7.817E-02	0.000E+00
1.000L	0.000E+00	-7.945E-10	-3.708E-09	0.000E+00

****

****** INTERNAL FORCES OF SHEAR KEY ******

SHEAR KEYS NO. 8

AT POINT	LONGITUDINAL	HORIZONTAL	VERTICAL	ROTATION
0.000L	0.000E+00	0.000E+00	0.000E+00	0.000E+00
0.100L	0.000E+00	9.821E-04	4.583E-03	0.000E+00
0.200L	0.000E+00	2.008E-03	9.369E-03	0.000E+00
0.300L	0.000E+00	3.003E-03	1.401E-02	0.000E+00
0.400L	0.000E+00	3.790E-03	1.769E-02	0.000E+00
0.500L	0.000E+00	4.038E-03	1.884E-02	0.000E+00
0.600L	0.000E+00	3.790E-03	1.769E-02	0.000E+00
0.700L	0.000E+00	3.003E-03	1.401E-02	0.000E+00
0.800L	0.000E+00	2.008E-03	9.369E-03	0.000E+00
0.900L	0.000E+00	9.821E-04	4.583E-03	0.000E+00
1.000L	0.000E+00	-3.160E-10	-1.475E-09	0.000E+00

****

ภาคผนวก ค. โปรแกรมคอมพิวเตอร์

<u>โฟลว์ชาร์ตของโปรแกรม AMS.</u>

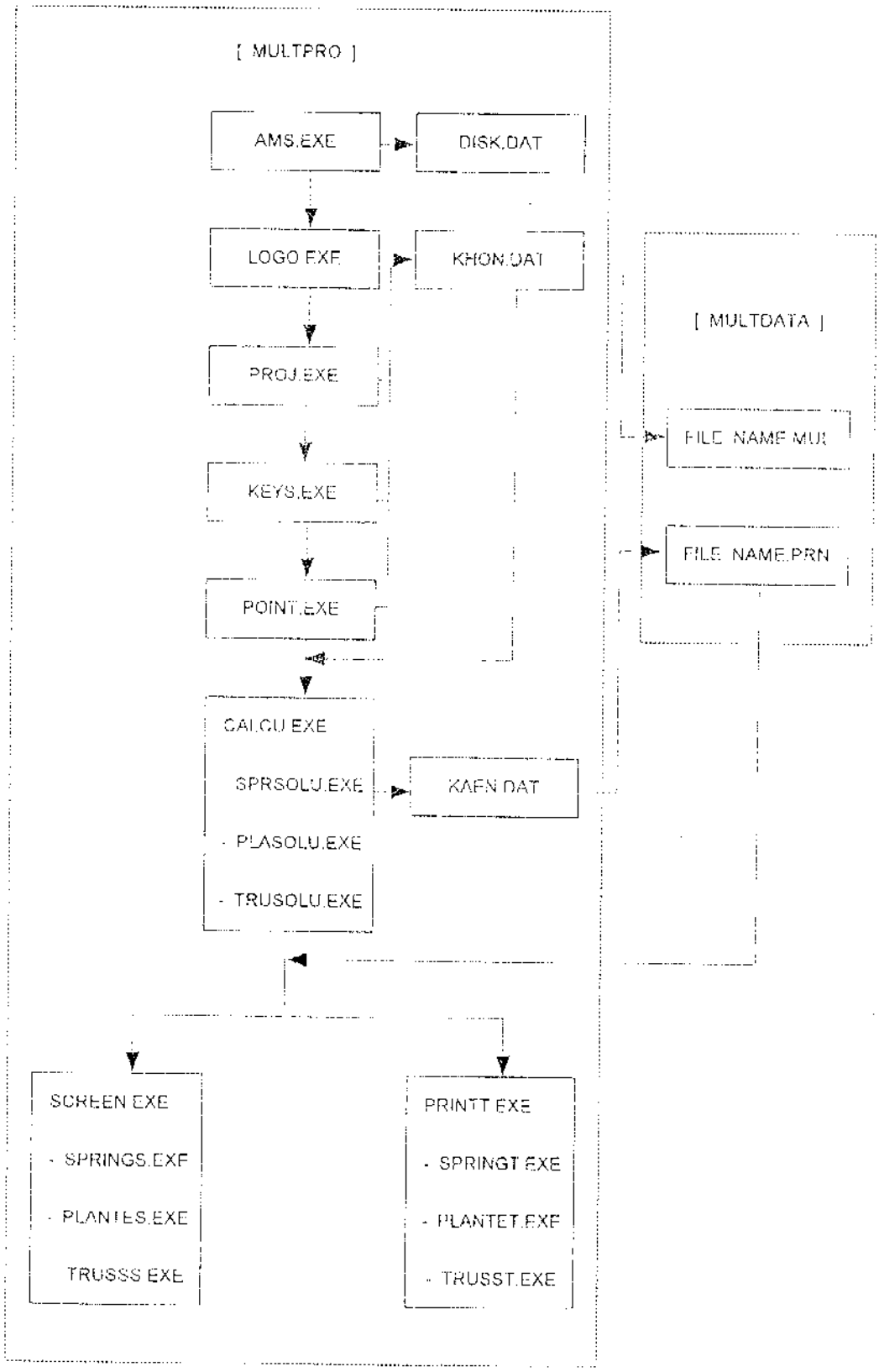

MEMORY REQUIREMENT

FILE	MEMORY REQUIREMENT (Bytes)
[MULTPRO]	
PROJ.EXE	13,364
BEAM.EXE	32,856
KEYS.EXE	24,384
LOAD.EXE	15,902
DISK.DAT	6
KHON.DAT	506
KAEN.DAT	36
LOGO.EXE	4,056
BRUN45.EXE	77,440
SCREEN.EXE	4,098
CALCU.EXE	4,098
PRINTT.EXE	4,098
TRUSOLU.EXE	50,688
POINT.EXE	18,876
PLASOLU.EXE	52,786
SPRSOLU.EXE	49,626
SPRINGT.EXE	25,294
PLATET.EXE	25,880
TRUSST.EXE	25,158
TRUSSS.EXE	24,018
PLATES.EXE	24,860
SPRINGS.EXE	24,308
AMS.EXE	14,148
TRUSS.EXE	57,910
TOTAL	**577,940**
[MULTDATA]	
FILE NAME.MUL	-
FILE NAME.PRN	-

USER GUIDE

Card Number	Symbol	Description
1	STRT	To start the structure properties determination routines.
2	TITLE	Analysis title
3	N	Number of beams
	NBT	Number of beam types
	SPAN	Span length
	UNIT	Unit of length
4	IBDN (I)	Beam type distribution
5	E - MOD	Beam's Modulus of Elasticity
	POIS	Beam's Poisson ratio
	1	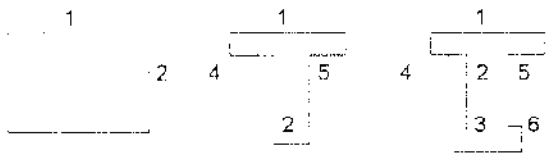
	2	
	3	
	4	RECTANGULAR TEE-SECTION III-SECTION
	5	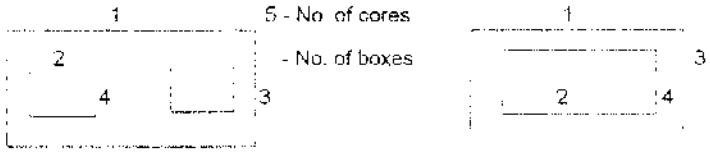 5 - No. of cores
	6	- No. of boxes
		HOLLOW CORE BOX-SECTION
		J - Solid J - Thin wall tube
	BTYP	Section type of beams
6	MSKT	Number of shear key types
	ISDN (I)	Shear key type distribution
*7/	X	X - shear key stiffness
	Y	Y - shear key stiffness
	Z	Z - shear key stiffness
spring	O	O - shear key stiffness
type	L.LEV	Left shear key joint level
	R.LEV	Right shear key joint level
		(measured from beam's top surface)

Card Number	Symbol	Description
*7/	Es	Plate's Modulus of Elasticity
	Ts	Plate's thickness
	Hz	
plate	Vc	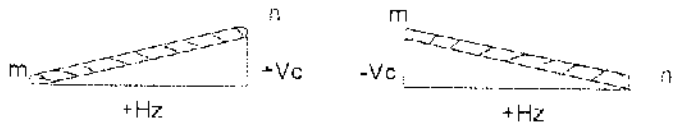
type		
	L.LEV	Left shear key joint level
	R.LEV	Right shear key joint level
	POIS	Plate's poisson's Ratio
*7/	Es	Truss's Modulus of Elasticity
	Ts	Truss's thickness
	Hz	same as plate
truss	Vc	
type	L.LEV	Left shear key joint level
	R.LEV	Right shear key joint level
	Kx	X - shear key stiffness
	Ko	O - shear key stiffness
8	LOAD	To start the load routines
9	TITLE	Load case title
10	NL	Number of loads
	NHM	Number of harmonice
	INC	Increment of harmonic number
	UNIT	Unit of loads
11	R	Load magnitude or load intensity
	V	Width of load
	U	Length of load
	C	Longitudinal position of load centroid
	Ecc	Load eccentricity 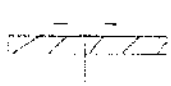
	TPLD	Load type (CONCENTRATED, UNIFORM)
	LDN	The beam on which this load acts

Card Number	Symbol	Description
12	YY1	Coordinates of 4 points
	ZZ1	at which stresses will
	YY2	be calculated
	ZZ2	
	YY3	
	ZZ3	
	YY4	
	ZZ4	
13	ISD	0 if no shear key displacements are to be calculated.
	NP	Number of points along the beams at which all results will be calculated.
	X (I)	The positions at which all results will be calculated in incraments of span length (e.g. 0.1, 0.2, etc)
14	STOP	To terminate the analysis

```
REM***********************************************************************
REM                                  ANALYSIS
REM              THIS PROGRAM ENABLES THE ANALYSIS OF SIMPLY SUPPORTED
REM                              MULTIBEAM STRUCTURES
REM***********************************************************************
DIM ISUM(30)
DIM ISUM(30)
DIM X(15)
CLS
SHELL "logo.exe"
LOCATE 6, 6, 1, 1, 13
5   OPEN "I", #2, "DISC.DAT"
     INPUT #2, PR$
     INPUT #2, DA$
    CLOSE #2
    OPEN "I", #4, "LAST.DAT"
     INPUT #4, FILE$
     INPUT #4, PRO$
     INPUT #4, LLYE$
     INPUT #4, LAC$
    CLOSE #4
    CLS
    GOSUB 1500
    LOCATE 11, 5: PRINT "SELECT ACTION"
    LOCATE 11, 35: PRINT "< C >   CONTINUE CURRENT FILE"
    LOCATE 12, 35: PRINT "< N >   CREATE NEW FILE"
    LOCATE 13, 35: PRINT "< E >   CALL EXISTING FILE"
    LOCATE 18, 5: PRINT "CURRENT PROJECT FILENAME ==> "; DA$ + ":\MULTDATA\" + FILE$ + ".MUL"
    Z$ = ""
    LOCATE 22, 5: INPUT "ENTER YOUR SELECTION ==> "; Z$
    IF Z$ = "C" OR Z$ = "c" THEN GOTO 10
    IF Z$ = "N" OR Z$ = "n" THEN GOTO 120
    IF Z$ = "E" OR Z$ = "e" THEN GOTO 130
    GOTO 5
10  CLS
    GOSUB 1500
    LOCATE 9, 37: PRINT " MAIN MENU "
    LOCATE 11, 5: PRINT "SELECT NEXT ACTION"
    LOCATE 11, 35: PRINT "< D >   DATA MODE"
    LOCATE 12, 35: PRINT "< S >   SOLUTION MODE"
    LOCATE 13, 35: PRINT "< R >   RESULT MODE"
    LOCATE 14, 35: PRINT "< U >   UTILITY MODE"
    LOCATE 17, 35: PRINT "< C >   CHANGE FILE"
    LOCATE 18, 35: PRINT "< E >   EXIT TO DOS"
    Z$ = ""
    LOCATE 22, 5: INPUT "ENTER YOUR SELECTION ==> "; Z$
    IF Z$ = "D" OR Z$ = "d" THEN GOTO 20
    IF Z$ = "S" OR Z$ = "s" THEN GOTO 40
    IF Z$ = "R" OR Z$ = "r" THEN GOTO 60
    IF Z$ = "U" OR Z$ = "u" THEN GOTO 80
    IF Z$ = "C" OR Z$ = "c" THEN GOTO 5
    IF Z$ = "E" OR Z$ = "e" THEN END
    GOTO 10
REM DATA
20  CLS
    GOSUB 1500
    LOCATE 9, 37: PRINT " DATA MODE "
    LOCATE 11, 5: PRINT "SELECT NEXT ACTION "
    LOCATE 11, 35: PRINT "< P >  PROJECT DATA"
    LOCATE 12, 35: PRINT "< B >  BEAM DATA"
    LOCATE 13, 35: PRINT "< S >  SHEAR KEY DATA"
    LOCATE 14, 35: PRINT "< L >  LOAD DATA"
    LOCATE 18, 35: PRINT "< E >  EXIT TO MAIN MENU"
    Z$ = ""
    LOCATE 22, 5: INPUT "ENTER YOUR SELECTION ==> "; Z$
    IF Z$ = "P" OR Z$ = "p" THEN A$ = PR$ + ":\MULTPRO\PROJ.EXE": GOTO 30
    IF Z$ = "B" OR Z$ = "b" THEN A$ = PR$ + ":\MULTPRO\BEAM.EXE": GOTO 30
    IF Z$ = "S" OR Z$ = "s" THEN A$ = PR$ + ":\MULTPRO\KEYS.EXE": GOTO 30
    IF Z$ = "L" OR Z$ = "l" THEN A$ = PR$ + ":\MULTPRO\LOAD.EXE": GOTO 30
    IF Z$ = "E" OR Z$ = "e" THEN GOTO 10
    GOTO 20
30  SHELL A$: GOTO 20
40  CLS
    GOSUB 1500
    LOCATE 9, 37: PRINT " SOLUTION MODE "
    LOCATE 11, 5: PRINT "SELECT NEXT ACTION "
    LOCATE 11, 35: PRINT "< S >   SPECIFY POINTS"
    LOCATE 12, 35: PRINT "< C >   EXECUTION"
    LOCATE 18, 35: PRINT "< E >   EXIT TO MAIN MENU"
    Z$ = ""
    LOCATE 22, 5: INPUT "ENTER YOUR SELECTION ==> "; Z$
    IF Z$ = "S" OR Z$ = "s" THEN A$ = PR$ + ":\MULTPRO\POINT.EXE": GOTO 50
    IF Z$ = "C" OR Z$ = "c" THEN A$ = PR$ + ":\MULTPRO\CALCU.EXE": GOTO 50
    IF Z$ = "E" OR Z$ = "e" THEN GOTO 10
    GOTO 40
50  SHELL A$: GOTO 40
60  CLS
    GOSUB 1500
    LOCATE 9, 37: PRINT " RESULT MODE "
    LOCATE 11, 5: PRINT "SELECT NEXT ACTION "
    LOCATE 11, 35: PRINT "< S >   PRINT ON SCREEN"
    LOCATE 12, 35: PRINT "< P >   PRINT ON PRINTER"
    LOCATE 18, 35: PRINT "< E >   EXIT TO MAIN MENU"
    Z$ = ""
    LOCATE 22, 5: INPUT "ENTER YOUR SELECTION ==> "; Z$
    IF Z$ = "S" OR Z$ = "s" THEN A$ = PR$ + ":\MULTPRO\SCREEN.EXE": GOTO 70
    IF Z$ = "P" OR Z$ = "p" THEN A$ = PR$ + ":\MULTPRO\PRINTT.EXE": GOTO 70
    IF Z$ = "E" OR Z$ = "e" THEN GOTO 10
    GOTO 60
70  SHELL A$: GOTO 60
80  CLS
    GOSUB 1500
    LOCATE 9, 37: PRINT " UTILITY MODE "
    LOCATE 11, 5: PRINT "SELECT NEXT ACTION"
    LOCATE 11, 35: PRINT "< P >  PROGRAM DRIVE [": PR$; "]"
    LOCATE 12, 35: PRINT "< D >  DATA DRIVE     [": DA$; "]"
    LOCATE 18, 35: PRINT "< E >  EXIT TO MAIN MENU"
    Z$ = ""
    LOCATE 22, 5: INPUT "ENTER YOUR SELECTION ==> "; Z$
    IF Z$ = "P" OR Z$ = "p" THEN GOTO 90
    IF Z$ = "D" OR Z$ = "d" THEN GOTO 100
    IF Z$ = "E" OR Z$ = "e" THEN GOTO 110
    GOTO 80
90  LOCATE 22, 5: INPUT "PROGRAM IN THE DISC DRIVE ==> "; PR$
    GOTO 80
100 LOCATE 22, 5: INPUT "DATA DISK IN THE DISK DRIVE ==> "; DA$
    GOTO 80
110 OPEN "O", #2, "DISC.DAT"
    PRINT #2, PR$
    PRINT #2, DA$
    CLOSE
    GOTO 10
120 OPEN "O", #1, "ISUM.DAT"
    FOR I = 1 TO 150
    PRINT #1,
    PRINT #1,
    PRINT #1,
    PRINT #1,
    NEXT I
    CLOSE #1
```

```
    OPEN "O", #4, "KARN.DAT"
    PRINT #4, FILE$
    PRINT #4, PRO$
    PRINT #4, KEY$
    PRINT #4, ENG$
    CLOSE #4
    GOTO 10
130 REM "EXISING PROJECT"
    CLS
    GOSUB 1300
    FILE3$ = DA$ + ":\MULTDATA\*.MUL"
    LOCATE 11, 1: FILES FILE3$
    LOCATE 11, 1: PRINT FILE3$
    GOSUB 1300
    LOCATE 5, 24: PRINT " EXISING FILE "
    LOCATE 22, 5: INPUT "PROJECT FILENAME ---> "; FILE3$
    IF FILE3$ = "" THEN GOTO 130
    FILE4$ = DA$ + ":\MULTDATA\" + FILE3$ + ".MUL"
    FILE5$ = DA$ + ":\MULTDATA\" + FILE3$ + ".PEN"
    ON ERROR GOTO 5
    OPEN "I", #1, FILE4$
    ON ERROR GOTO 5
     INPUT #1, FILE$
     INPUT #1, PRO$
     INPUT #1, ENG$
     INPUT #1, UNITS(1)
     INPUT #1, UNITS(2)
     INPUT #1, N
     INPUT #1, NBT
     INPUT #1, SPAN
    FOR I = 1 TO N
     INPUT #1, IBDN(I)
    NEXT I
    FOR I = 1 TO NBT
    FOR J = 1 TO 5
     INPUT #1, P(I, J)
    NEXT J
    FOR K = 1 TO 2
     INPUT #1, BTYP$(I, K)
    NEXT K
    NEXT I
     INPUT #1, KEYS$
     INPUT #1, NSKT
    FOR I = 1 TO N - 1
     INPUT #1, ISDN(I)
    NEXT I
    FOR I = 1 TO NSKT
    FOR J = 1 TO 5
     INPUT #1, S(I, J)
    NEXT J
    NEXT I
     INPUT #1, NL
     INPUT #1, XDM
     INPUT #1, INC
    FOR I = 1 TO NL
     INPUT #1, X(I)
     INPUT #1, Y(I)
     INPUT #1, U(I)
     INPUT #1, C(I)
     INPUT #1, E(I)
     INPUT #1, TPLD$(I, 1)
     INPUT #1, LDN(I)
    NEXT I
    FOR I = 1 TO NBT
    FOR J = 1 TO 4
     INPUT #1, YY(I, J)
     INPUT #1, ZZ(I, J)
    NEXT J
    NEXT I
     INPUT #1, ISD
     INPUT #1, NP
    FOR I = 1 TO NP
     INPUT #1, X(I)
    NEXT I
    CLOSE
    OPEN "O", #1, "ENON.DAT"
    PRINT #1, FILE$
    PRINT #1, PRO$
    PRINT #1, ENG$
    PRINT #1, UNITS(1)
    PRINT #1, UNITS(2)
    PRINT #1, N
    PRINT #1, NBT
    PRINT #1, SPAN
    FOR I = 1 TO N
    PRINT #1, IBDN(I)
    NEXT I
    FOR I = 1 TO NBT
    FOR J = 1 TO 5
    PRINT #1, P(I, J)
    NEXT J
    FOR K = 1 TO 2
    PRINT #1, BTYP$(I, K)
    NEXT K
    NEXT I
    PRINT #1, KEYS$
    PRINT #1, NSKT
    FOR I = 1 TO N - 1
    PRINT #1, ISDN(I)
    NEXT I
    FOR I = 1 TO NSKT
    FOR J = 1 TO 5
    PRINT #1, S(I, J)
    NEXT J
    NEXT I
    PRINT #1, NL
    PRINT #1, XDM
    PRINT #1, INC
    FOR I = 1 TO NL
    PRINT #1, X(I)
    PRINT #1, Y(I)
    PRINT #1, U(I)
    PRINT #1, C(I)
    PRINT #1, E(I)
    PRINT #1, TPLD$(I, 1)
    PRINT #1, LDN(I)
    NEXT I
    FOR I = 1 TO NBT
    FOR J = 1 TO 4
    PRINT #1, YY(I, J)
    PRINT #1, ZZ(I, J)
    NEXT J
    NEXT I
    PRINT #1, ISD
    PRINT #1, NP
    FOR I = 1 TO NP
    PRINT #1, X(I)
    NEXT I
    CLOSE #1
    OPEN "O", #4, "KARN.DAT"
```

```
     PRINT #4, FILE$
     PRINT #4, PRG$
     PRINT #4, KEY$
     PRINT #4, ENG$
     CLOSE #4
     GOTO 10
1500 REM    #
     LOCATE 5, 33: PRINT "M O L T I B E A M"
     LOCATE 7, 14: PRINT "K H O N K A E N  U N I V E R S I T Y"
     LOCATE 9, 1: PRINT "*****************************************************"
     LOCATE 30, 1: PRINT "*****************************************************"
     RETURN
```

```
REM*****************************************************************
REM                         PROJ.BAS
REM   THIS FILE IS USED FOR RECEIVING PROJECT DATA
REM*****************************************************************
DECLARE SUB datainput (d$, X%, y%)
DECLARE FUNCTION keycode% ()
DECLARE FUNCTION bufferinput$ (ar$, N%, x1%, y1%, filter$)
CONST backspace = 8
CONST enter = 13
CONST esc = 27
CONST homearw = 18176
CONST leftarw = 19200
CONST rightarw = 19712
CONST endarw = 20224
CONST insert = 20992
CONST delete = 21248
CONST maxrow = 1, maxcol = 1
DIM X(15)
DIM ibdn(30)
DIM isdn(30)
OPEN "I", #2, "disk.DAT"
 INPUT #2, pr$
 INPUT #2, Da$
CLOSE
OPEN "I", #1, "CRON.DAT"
 INPUT #1, file$
 INPUT #1, PRO$
 INPUT #1, ENG$
 INPUT #1, UNITS$(1)
 INPUT #1, UNITS$(2)
 INPUT #1, N
 INPUT #1, NBT
 INPUT #1, SPAN
FOR I = 1 TO N
 INPUT #1, ibdn(I)
NEXT I
FOR I = 1 TO NBT
FOR J = 1 TO 6
 INPUT #1, P(I, J)
NEXT J
FOR K = 1 TO 2
 INPUT #1, BTYP$(I, K)
NEXT K
NEXT I
 INPUT #1, SETS$
 INPUT #1, NSET
FOR I = 1 TO N - 1
 INPUT #1, isdn(I)
NEXT I
FOR I = 1 TO NSET
FOR J = 1 TO 8
 INPUT #1, S(I, J)
NEXT J
NEXT I
 INPUT #1, NL
 INPUT #1, NOM
 INPUT #1, INC
FOR I = 1 TO NL
 INPUT #1, X(I)
 INPUT #1, Y(I)
 INPUT #1, D(I)
 INPUT #1, C(I)
 INPUT #1, E(I)
 INPUT #1, TPLD$(I, 1)
 INPUT #1, LDN(I)
NEXT I
```

```
FOR I = 1 TO NBT
FOR J = 1 TO 4
 INPUT #1, YY(I, J)
 INPUT #1, SZ(I, J)
NEXT J
NEXT I
 INPUT #1, ISD
 INPUT #1, NP
FOR I = 1 TO NP
 INPUT #1, X(I)
NEXT I
CLOSE
100     CLS
        GOSUB 1500
        LOCATE 8, 32: PRINT "  PROJECT DATA  "
        LOCATE 11, 13: PRINT "SELECT NEXT ACTION :"
        LOCATE 13, 37: PRINT "< I >  INPUT DATA"
        LOCATE 15, 37: PRINT "< P >  PRINT DATA"
        LOCATE 16, 37: PRINT "< E >   EXIT TO DATA MODE"
200     LOCATE 23, 37: PRINT "
        LOCATE 23, 13: INPUT "ENTER YOUR SELECTION ===> ", Z$
        ON ERROR GOTO 200
        IF Z$ = "E" OR Z$ = "e" THEN GOTO 300
        IF Z$ = "I" OR Z$ = "i" THEN GOTO 210
        IF Z$ = "P" OR Z$ = "p" THEN GOTO 220
        GOTO 200
210     A$ = "INPUT": GOTO 300
220     A$ = "PRINT": GOTO 400
240     GOTO 100
300     CLS
301     GOSUB 1500
        LOCATE 9, 35: PRINT "   INPUT   "
        LOCATE 11, 20: PRINT "PROJECT TITLE     :  "
        LOCATE 12, 20: PRINT "ENGINEER          :  "
        LOCATE 13, 20: PRINT "LENGTH UNIT       :  "
        LOCATE 14, 20: PRINT "FORCE UNIT        :  "
        LOCATE 15, 20: PRINT "FILENAME          :  "
        LOCATE 23, 13: PRINT "
        LOCATE 11, 40: INPUT "", PRO$
        LOCATE 12, 40: INPUT "", ENG$
        LOCATE 13, 40: INPUT "", UNITS$(1)
        LOCATE 14, 40: INPUT "", UNITS$(2)
        LOCATE 15, 40: INPUT "", file$
360     LOCATE 22, 13: PRINT "
        LOCATE 22, 13: INPUT "ACCEPT ABOVE DATA SCREEN [ Y/N ] ===>", B$
        ON ERROR GOTO 360
        IF B$ = "Y" OR B$ = "y" THEN GOTO 500
        IF B$ = "N" OR B$ = "n" THEN GOTO 300
        GOTO 360
500     CLS : REM    N
        REM ******** DISK STORE ************
        IF file$ = "" THEN GOTO 600
        FILE1$ = Da$ + ":\MULTDATA\" + file$ + ".MUL"
        OPEN "O", #1, FILE1$
        PRINT #1, file$
        PRINT #1, PRO$
        PRINT #1, ENG$
        PRINT #1, UNITS$(1)
        PRINT #1, UNITS$(2)
        PRINT #1, N
        PRINT #1, NBT
        PRINT #1, SPAN
        FOR I = 1 TO N
        PRINT #1, ibdn(I)
        NEXT I
        FOR I = 1 TO NBT
```

```
FOR J = 1 TO A
PRINT #1, P(I, J)
NEXT J
FOR K = 1 TO 2
PRINT #1, ETYPE(I, K)
NEXT K
NEXT I
PRINT #1, KEY$$
PRINT #1, NEXT
FOR I = 1 TO N - 1
PRINT #1, indn(I)
NEXT I
FOR I = 1 TO NEXT
FOR J = 1 TO A
PRINT #1, E(I, J)
NEXT J
NEXT I
PRINT #1, NL
PRINT #1, NNW
PRINT #1, INC
FOR I = 1 TO NL
PRINT #1, X(I)
PRINT #1, Y(I)
PRINT #1, D(I)
PRINT #1, C(I)
PRINT #1, E(I)
PRINT #1, TPLDs(I, 3)
PRINT #1, LDN(I)
NEXT I
FOR I = 1 TO NST
FOR J = 1 TO 4
PRINT #1, YY(I, J)
PRINT #1, ZZ(I, J)
NEXT J
NEXT I
PRINT #1, ISD
PRINT #1, NP
FOR I = 1 TO NP
PRINT #1, X(I)
NEXT I
CLOSE
OPEN "O", #1, "EBGN.DAT"
PRINT #1, files
PRINT #1, PROS
PRINT #1, ENGS
PRINT #1, UNITS(1)
PRINT #1, UNITS(2)
PRINT #1, N
PRINT #1, NST
PRINT #1, SPAN
FOR L = 1 TO N
PRINT #1, Ibdn(I)
NEXT I
FOR I = 1 TO NST
FOR J = 1 TO 5
PRINT #1, P(I, J)
NEXT J
FOR K = 1 TO 2
PRINT #1, ETYPE(I, K)
NEXT K
NEXT I
PRINT #1, KEY$$
PRINT #1, NEXT
FOR I = 1 TO N - 1
PRINT #1, indn(I)
NEXT I
FOR I = 1 TO NEXT
FOR J = 1 TO 5
PRINT #1, S(I, J)
NEXT J
NEXT I
PRINT #1, NL
PRINT #1, NNW
PRINT #1, INC
FOR I = 1 TO NL
PRINT #1, X(I)
PRINT #1, Y(I)
PRINT #1, D(I)
PRINT #1, C(I)
PRINT #1, E(I)
PRINT #1, TPLDs(I, J)
PRINT #1, LDN(I)
NEXT I
FOR I = 1 TO NST
FOR J = 1 TO 4
PRINT #1, YY(I, J)
PRINT #1, ZZ(I, J)
NEXT J
NEXT I
PRINT #1, ISD
PRINT #1, NP
FOR I = 1 TO NP
PRINT #1, X(I)
NEXT I
CLOSE
END
1500    REM    *
        LOCATE 5, 31: PRINT "M U L T I B E A M"
        LOCATE 7, 22: PRINT "K H O N K A E N   U N I V E R S I T Y"
        LOCATE 9, 13: PRINT "*********************************************************"
        LOCATE 20, 13: PRINT "*********************************************************"
        RETURN
400     CLS : GOSUB 1500
        LOCATE 9, 33: PRINT "   PRINT   "
        LOCATE 11, 20: PRINT "PROJECT TITLE     : "; PROS
        LOCATE 12, 20: PRINT "ENGINEER          : "; ENGS
        LOCATE 13, 20: PRINT "FORCE UNIT        : "; UNITS(1)
        LOCATE 14, 20: PRINT "LENGTH UNIT       : "; UNITS(2)
        LOCATE 15, 20: PRINT "FILENAME          : "; files
        LOCATE 23, 13: INPUT "PRESS ANY KEY TO CONTINUE.", Z$
        GOTO 100
        END

FUNCTION Bufferinputs (in$, N%, x1%, y1%, filter$) STATIC
P$ = LEFT$(in$ + SPACE$(N%), N%)
PTR% = 0
DO
    IF ins% THEN
        LOCATE y1%, x1%, 1, 1, 12
    ELSE
        LOCATE y1%, x1%, 1, 6, 12
    END IF
    PRINT P$;
    LOCATE y1%, x1% + PTR%
    K% = keycode%
    SELECT CASE K%
    CASE backspace
       IF PTR% THEN
          P$ = P$ + " "
          P$ = LEFT$(P$, PTR% - 1) + MID$(P$, PTR% + 1)
```

```
            PTRX = PTRX - 1
        END IF
    CASE enter
        buffering$ = STRING$(P$)
    CASE esc
        buffering$ = ""
    CASE homearw
        PTRX = 0
    CASE rightarw
        IF PTRX < (MX - 1) THEN PTRX = PTRX + 1
    CASE leftarw
        IF PTRX THEN PTRX = PTRX - 1
    CASE endarw
        PTRX = MX - 1
    CASE insert
        ins$ = NOT ins$
    CASE delete
        P$ = P$ + " "
        P$ = LEFT$(P$, PTRX) + MID$(P$, PTRX + 2)
    CASE IX < 32, IX > 255
       SOUND 900, 1
       SOUND 700, 1
    CASE ELSE
       IF filter$ = "" OR INSTR(filter$, CHR$(IX)) THEN
          IF ins$ THEN
             P$ = LEFT$(LEFT$(P$, PTRX) + CHR$(IX) + MID$(P$, PTRX + 1), MX)
          ELSE
             IF PTRX < MX THEN MID$(P$, PTRX + 1, 1) = CHR$(IX)
          END IF
          IF PTRX < (MX - 1) THEN PTRX = PTRX + 1
       ELSE
          SOUND 900, 1
          SOUND 700, 1
       END IF
    END SELECT
LOOP UNTIL IX = enter OR IX = esc
LOCATE , , 0
END FUNCTION


SUB datainput (m#, X%, y%) STATIC
   FOR I% = 1 TO maxrow
   FOR J% = 1 TO maxcol
      x1% = (J% - 1) * 7 + X% + 1: y1% = y% + I%
      DO
        temp# = VAL(buffering$("", X%, x1%, y1%, ".-0123456789"))
      LOOP UNTIL temp# >= -3.402E+38 AND temp# <= 3.402E+38
      m# = temp#
   NEXT J%
   NEXT I%
END SUB

FUNCTION keycode$ STATIC
  DO
     P$ = INKEY$
  LOOP UNTIL P$ <> ""
  keycode$ = CHR$(P$ + CHR$(0))
END FUNCTION

SUB keypressed STATIC
   DO
   LOOP WHILE INKEY$ = " "
END SUB
```

```
REM*****************************************************************
REM                           BEAM.BAS
REM          THIS FILE IS USED FOR RECEIVING BEAM DATA
REM*****************************************************************
DECLARE SUB DATAINPUT (m$, a%, b%)
DECLARE FUNCTION keycode% ()
DECLARE FUNCTION Bufferinput$ (ar$, N%, x1%, y1%, filter$)
CONST backspace = 8
CONST enter = 13
CONST esc = 27
CONST homearw = 18176
CONST leftarw = 19200
CONST rightarw = 19712
CONST endarw = 20224
CONST insert = 20992
CONST delete = 21248
CONST maxrow = 3, maxcol = 1
CLS
DIM x(15)
DIM isdn(30)
DIM ibdn(30)
DIM BTYPE(30, 2)
OPEN "I", #1, "KNOW.DAT"
 INPUT #1, FILE$
 INPUT #1, PSO$
 INPUT #1, ENG$
 INPUT #1, UNITS(1)
 INPUT #1, UNITS(2)
 INPUT #1, N
 INPUT #1, NBT
 INPUT #1, SPAN
FOR I = 1 TO N
 INPUT #1, ibdn(I)
NEXT I
FOR I = 1 TO NBT
FOR J = 1 TO 5
 INPUT #1, P(I, J)
NEXT J
FOR K = 1 TO 3
 INPUT #1, BTYPE(I, K)
NEXT K
NEXT I
 INPUT #1, KEYE$
 INPUT #1, NEXT
FOR I = 1 TO N - 1
 INPUT #1, isdn(I)
NEXT I
FOR I = 1 TO NEXT
FOR J = 1 TO 4
 INPUT #1, S(I, J)
NEXT J
NEXT I
 INPUT #1, NL
 INPUT #1, XNK
 INPUT #1, INC
FOR I = 1 TO NL
 INPUT #1, X(I)
 INPUT #1, Y(I)
 INPUT #1, W(I)
 INPUT #1, C(I)
 INPUT #1, R(I)
 INPUT #1, TPLDN(I, 1)
 INPUT #1, LDN(I)
NEXT I
FOR I = 1 TO NBT
FOR J = 1 TO 4
 INPUT #1, YY(I, J)
 INPUT #1, ZZ(I, J)
NEXT J
NEXT I
 INPUT #1, ISD
 INPUT #1, NP
FOR I = 1 TO NP
 INPUT #1, x(I)
NEXT I
CLOSE
100 CLS
GOSUB 1500
LOCATE 9, 32: PRINT "  BEAM DATA  "
LOCATE 11, 33: PRINT "SELECT NEXT ACTION :"
LOCATE 13, 37: PRINT "< I >  INPUT DATA"
LOCATE 15, 37: PRINT "< P >  PRINT DATA"
LOCATE 17, 37: PRINT "< E >   EXIT TO DATA MODE"
200 LOCATE 23, 13: PRINT "                                      "
LOCATE 23, 13: INPUT "ENTER YOUR SELECTION ===> ", Z$
ON ERROR GOTO 100
IF Z$ = "E" OR Z$ = "e" THEN GOTO 250
IF Z$ = "I" OR Z$ = "i" THEN GOTO 210
IF Z$ = "P" OR Z$ = "p" THEN GOTO 230
GOTO 100
210 A$ = "INPUT": GOTO 300
230 A$ = "PRINT": GOTO 500
240 GOTO 100
250 GOTO 500
300 CLS : GOSUB 1500
CON1$ = "                         THE DIMENSION STORAGE (30)."
CON2$ = "                         THE DIMENSION STORAGE (10)."
LOCATE 9, 33: PRINT "   INPUT   "
LOCATE 11, 30: PRINT "NUMBER OF BEAM              .."
LOCATE 12, 30: PRINT "NUMBER OF BEAM TYPES        .."
LOCATE 13, 30: PRINT "SPAN LENGTH                 .."
310 L = 11: M = 50: ON ERROR GOTO 310
DATAINPUT A$, 50, 10: N = A$
IF N = 0 THEN GOTO 300
IF N > 30 THEN LOCATE 15, 15: PRINT "=====> THE NO. OF BEAMS EXCEEDS", CON1$: INPUT Z$: GOTO 300
320 L = 12: M = 50: ON ERROR GOTO 320
DATAINPUT A$, 50, 11: NBT = A$
IF NBT = 0 THEN GOTO 300
IF NBT > 10 THEN LOCATE 15, 15: PRINT "=====> THE NO. OF BEAM TYPE EXCEEDS", CON2$: INPUT Z$: GOTO 300
330 L = 13: M = 50: ON ERROR GOTO 330
DATAINPUT A$, 50, 12: SPAN = A$
IF SPAN = 0 THEN GOTO 300
CLS : GOSUB 1500
LOCATE 9, 33: PRINT "  INPUT   "
FOR I = 1 TO NBT
LOCATE 9 + I, 30: PRINT "NUMBER OF BEAM TYPE"; I; : PRINT "   .."
DATAINPUT A$, 50, 8 + I: BEAM(I) = A$
STRUC = STRUC + BEAM(I)
IF STRUC > N THEN INPUT "  ( THE BEAM IS OVER )", Q: STRUC = 0: GOTO 300
NEXT I
360 LOCATE 22, 13: PRINT "                                        "
LOCATE 22, 13: INPUT "ACCEPT ABOVE DATA SCREEN [Y/N] ===> ", b$
ON ERROR GOTO 360
IF b$ = "Y" OR b$ = "y" THEN GOTO 490
IF b$ = "N" OR b$ = "n" THEN GOTO 300
GOTO 360
490 CLS : GOSUB 1500
LOCATE 11, 13: PRINT "SELECT BEAM TYPE"
LOCATE 11, 37: PRINT "< 1 >   RECTANGULAR"
```

```
        LOCATE 12, 33: PRINT "< T >   TEE SECTION"
        LOCATE 13, 33: PRINT "< I >   III SECTION"
        LOCATE 14, 33: PRINT "< H >   HOLLOW CORE"
        LOCATE 15, 33: PRINT "< B >   BOX SECTION"
        LOCATE 21, 13: INPUT "WHAT IS SECTION TYPE OF BEAM ===> ", BTYPE$(I, 1)
        IF BTYPE$(I, 1) = "R" OR BTYPE$(I, 1) = "r" THEN BTYPE$(I, 1) = "RECTANGULAR": GOTO 496
        IF BTYPE$(I, 1) = "T" OR BTYPE$(I, 1) = "t" THEN BTYPE$(I, 1) = "TEE SECTION": GOTO 496
        IF BTYPE$(I, 1) = "I" OR BTYPE$(I, 1) = "i" THEN BTYPE$(I, 1) = "III SECTION": GOTO 496
        IF BTYPE$(I, 1) = "H" OR BTYPE$(I, 1) = "h" THEN BTYPE$(I, 1) = "HOLLOW CORE": GOTO 496
        IF BTYPE$(I, 1) = "B" OR BTYPE$(I, 1) = "b" THEN BTYPE$(I, 1) = "BOX SECTION": GOTO 496
        GOTO 490
496     LOCATE 22, 13: PRINT "                                                    "
        LOCATE 22, 13: INPUT "ACCEPT ABOVE DATA SCREEN ( Y/N ) ===> ", b4
        ON ERROR GOTO 486
        IF b4 = "Y" OR b4 = "y" THEN GOTO 497
        IF b4 = "N" OR b4 = "n" THEN GOTO 490
        GOTO 496
497     FOR I = 1 TO NBT
        BTYPE$(I + 1, 1) = BTYPE$(I, 1)
        IF BTYPE$(I, 1) = "RECTANGULAR" THEN GOTO 390
        IF BTYPE$(I, 1) = "TEE SECTION" THEN GOTO 1390
        IF BTYPE$(I, 1) = "III SECTION" THEN GOTO 1390
        IF BTYPE$(I, 1) = "HOLLOW CORE" THEN GOTO 1390
        IF BTYPE$(I, 1) = "BOX SECTION" THEN GOTO 1390
390     REM ""
395     CLS
        LOCATE 2, 25: PRINT "  BEAM TYPE "; I; "IS "; : PRINT BTYPE$(I, 1); "  "
        LOCATE 3, 13: PRINT "-----------------------------------------------------------"
        LOCATE 5, 13: PRINT "DIMENSION [1]       = "
        LOCATE 6, 13: PRINT "DIMENSION [2]       = "
        LOCATE 7, 13: PRINT "ELASTICITY MODULUS  = "
        LOCATE 8, 13: PRINT "POISSON RATIO       = "
        LOCATE 5, 47: PRINT "          |"
        LOCATE 6, 47: PRINT "*****************"
        LOCATE 7, 47: PRINT "*                 *"
        LOCATE 8, 47: PRINT "*                 * |"
        LOCATE 9, 47: PRINT "*                 **"
        LOCATE 10, 47: PRINT "*****************"
        LOCATE 20, 13: PRINT "-----------------------------------------------------------"
        DATAINPUT A8, 33, 4: P(I, 2) = A8
        DATAINPUT A8, 33, 5: P(I, 4) = A8
        DATAINPUT A8, 33, 6: P(I, 1) = A8
        DATAINPUT A8, 33, 7: P(I, 3) = A8
431     LOCATE 22, 13: INPUT "ACCEPT ABOVE DATA SCREEN ( Y/N ) ===> ", b4
        ON ERROR GOTO 431
        IF b4 = "Y" OR b4 = "y" THEN GOTO 475
        IF b4 = "N" OR b4 = "n" THEN GOTO 395
        GOTO 431
475     LOCATE 15, 13: PRINT "BEAM NUMBER OF TYPE : "; I
        LOCATE 16, 13: PRINT "-----------------------------------------------------------"
        LOCATE 17, 13: PRINT "                                                           "
        LOCATE 18, 13: PRINT "                                                           "
        LOCATE 19, 13: PRINT "                                                           "
        LOCATE 20, 13: PRINT "                                                           "
        LOCATE 21, 15: PRINT "BEAM NUMBER : "
        K = 15
        F = 17
        G = 1
        FOR K = 1 TO NBT
        FOR J = 1 TO BEAM(I)
        DO
        DATAINPUT A4, 27, 10: Q > A8
        IF Q > K THEN GOTO 430
        IF Q = BEAM(I) THEN GOTO 480
        IF Q > K THEN GOTO 480
        IF Q = 0 THEN GOTO 480
        ibdm(Q) = I
        IF G = 11 THEN F = 18: K = 15
        IF G = 21 THEN F = 19: K = 13
        LOCATE F, K: PRINT Q;
        K = K + 5
        G = G + 1
        LOOP
        NEXT J
        NEXT K
480     LOCATE 22, 13: INPUT "ACCEPT ABOVE DATA SCREEN ( Y/N ) ===> ", b4
        ON ERROR GOTO 480
        IF b4 = "Y" OR b4 = "y" THEN GOTO 485
        IF b4 = "N" OR b4 = "n" THEN GOTO 475
        GOTO 480
1390    REM ""
1395    CLS
        LOCATE 2, 25: PRINT "  BEAM TYPE "; I; "IS "; : PRINT BTYPE$(I, 1); "  "
        LOCATE 3, 13: PRINT "-----------------------------------------------------------"
        LOCATE 5, 13: PRINT "DIMENSION [1]       = "
        LOCATE 6, 13: PRINT "DIMENSION [2]       = "
        LOCATE 7, 13: PRINT "DIMENSION [3]       = "
        LOCATE 8, 13: PRINT "DIMENSION [4]       = "
        IF BTYPE$(I, 1) = "TEE SECTION" THEN LOCATE 9, 13: PRINT "DIMENSION [5]       = "
        IF BTYPE$(I, 1) = "HOLLOW CORE" THEN LOCATE 9, 13: PRINT "CORES                = "
        IF BTYPE$(I, 1) = "BOX SECTION" THEN LOCATE 9, 13: PRINT "BOXES                = "
        LOCATE 10, 13: PRINT "ELASTICITY MODULUS = "
        LOCATE 11, 13: PRINT "POISSON RATIO      = "
        IF BTYPE$(I, 1) = "TEE SECTION" THEN LOCATE 5, 47: PRINT "          |"
        IF BTYPE$(I, 1) = "TEE SECTION" THEN LOCATE 6, 47: PRINT "*****************"
        IF BTYPE$(I, 1) = "TEE SECTION" THEN LOCATE 7, 47: PRINT "*                 * 4"
        IF BTYPE$(I, 1) = "TEE SECTION" THEN LOCATE 8, 47: PRINT "******      ******"
        IF BTYPE$(I, 1) = "TEE SECTION" THEN LOCATE 9, 47: PRINT "*     *     * *"
        IF BTYPE$(I, 1) = "TEE SECTION" THEN LOCATE 10, 47: PRINT "*     *     * 5"
        IF BTYPE$(I, 1) = "TEE SECTION" THEN LOCATE 11, 47: PRINT "*     *     *-"
        IF BTYPE$(I, 1) = "TEE SECTION" THEN LOCATE 12, 47: PRINT "*     *******"
        IF BTYPE$(I, 1) = "TEE SECTION" THEN LOCATE 13, 47: PRINT "          |"
        IF BTYPE$(I, 1) = "HOLLOW CORE" THEN LOCATE 5, 47: PRINT "          |"
        IF BTYPE$(I, 1) = "HOLLOW CORE" THEN LOCATE 6, 47: PRINT "*****************"
        IF BTYPE$(I, 1) = "HOLLOW CORE" THEN LOCATE 7, 47: PRINT "*  *****  *****  *"
        IF BTYPE$(I, 1) = "HOLLOW CORE" THEN LOCATE 8, 47: PRINT "*  * 3 *4 *    *  * 3"
        IF BTYPE$(I, 1) = "HOLLOW CORE" THEN LOCATE 9, 47: PRINT "*  *****  *****  *"
        IF BTYPE$(I, 1) = "HOLLOW CORE" THEN LOCATE 10, 47: PRINT "*****************"
        IF BTYPE$(I, 1) = "BOX SECTION" THEN LOCATE 5, 47: PRINT "          |"
        IF BTYPE$(I, 1) = "BOX SECTION" THEN LOCATE 6, 47: PRINT "*****************"
        IF BTYPE$(I, 1) = "BOX SECTION" THEN LOCATE 7, 47: PRINT "*  ***********  *"
        IF BTYPE$(I, 1) = "BOX SECTION" THEN LOCATE 8, 47: PRINT "*  *4   2     *  * 3"
        IF BTYPE$(I, 1) = "BOX SECTION" THEN LOCATE 9, 47: PRINT "*  ***********  *"
        IF BTYPE$(I, 1) = "BOX SECTION" THEN LOCATE 10, 47: PRINT "*****************"
        LOCATE 20, 13: PRINT "-----------------------------------------------------------"
        DATAINPUT A2, 33, 4: P(I, 3) = A2
        DATAINPUT A8, 33, 5: P(I, 4) = A8
        DATAINPUT A2, 33, 6: P(I, 5) = A2
        DATAINPUT A2, 33, 7: P(I, 6) = A2
        DATAINPUT A4, 33, 8: P(I, 7) = A8
        DATAINPUT A8, 33, 9: P(I, 8) = A8
        DATAINPUT A2, 33, 10: P(I, 9) = A2
1461    LOCATE 22, 13: INPUT "ACCEPT ABOVE DATA SCREEN ( Y/N ) ===> ", b4
        ON ERROR GOTO 1461
        IF b4 = "Y" OR b4 = "y" THEN LOCATE 22, 13: PRINT "                                                    ": GOTO 147
        IF b4 = "N" OR b4 = "n" THEN GOTO 1395
        GOTO 1461
1475    LOCATE 15, 33: PRINT "BEAM NUMBER OF TYPE : "; I
        LOCATE 16, 33: PRINT "-----------------------------------------------------------"
        LOCATE 17, 13: PRINT "                                                           "
```

```
        LOCATE 18, 13: PRINT "
        LOCATE 19, 13: PRINT "
        LOCATE 20, 13: PRINT "
        LOCATE 21, 13: PRINT "BEAM NUMBER : "
        E = 15
        F = 17
        G = 1
        FOR I = 1 TO NBT
        FOR J = 1 TO BEAM(I)
        DO
        DATAINPUT A$, 21, 20: O = A$
        IF O = 0 THEN GOTO 1480
        IF G > N THEN GOTO 1480
        IF G > BEAM(I) THEN GOTO 1480
        IF O > N THEN GOTO 1480
        ibdm(O) = I
        IF G = 11 THEN F = 18: E = 15
        IF G = 21 THEN F = 19: E = 15
        LOCATE F, E: PRINT O;
        E = E + 5
        G = G + 1
        LOOP
        NEXT J
        NEXT I
1480    LOCATE 23, 13: INPUT "ACCEPT ABOVE DATA SCREEN [ Y/N ] ==> ", b$
        ON ERROR GOTO 1480
        IF b$ = "Y" OR b$ = "y" THEN GOTO 485
        IF b$ = "N" OR b$ = "n" THEN GOTO 1475
        GOTO 1480
2390    REM **
2395    CLS
        LOCATE 2, 25: PRINT "  BEAM SET "; I; "IS "; : PRINT BTYP$(I, 1); "  "
        LOCATE 3, 13: PRINT "-----------------------------------------------------------"
        LOCATE 5, 13: PRINT "DIMENSION [1]       = "
        LOCATE 6, 13: PRINT "DIMENSION [2]       = "
        LOCATE 7, 13: PRINT "DIMENSION [3]       = "
        LOCATE 8, 13: PRINT "DIMENSION [4]       = "
        LOCATE 9, 13: PRINT "DIMENSION [5]       = "
        LOCATE 10, 13: PRINT "DIMENSION [6]       = "
        LOCATE 11, 13: PRINT "ELASTICITY MODULUS = "
        LOCATE 12, 13: PRINT "POISSON RATIO       = "
        LOCATE 5, 47: PRINT "         1"
        LOCATE 6, 47: PRINT "*******************"
        LOCATE 7, 47: PRINT "*                * 4"
        LOCATE 8, 47: PRINT "*******   5  *******"
        LOCATE 9, 47: PRINT "      *       **"
        LOCATE 10, 47: PRINT "      *       * 2"
        LOCATE 11, 47: PRINT "     **       ***"
        LOCATE 12, 47: PRINT "      *         * 6"
        LOCATE 13, 47: PRINT "      ***********"
        LOCATE 14, 47: PRINT "         3"
        LOCATE 20, 13: PRINT "-----------------------------------------------------------"
        DATAINPUT A$, 33, 4: P(I, 3) = A$
        DATAINPUT A$, 33, 5: P(I, 4) = A$
        DATAINPUT A$, 33, 6: P(I, 5) = A$
        DATAINPUT A$, 33, 7: P(I, 6) = A$
        DATAINPUT A$, 33, 8: P(I, 7) = A$
        DATAINPUT A$, 33, 9: P(I, 8) = A$
        DATAINPUT A$, 33, 10: P(I, 1) = A$
        DATAINPUT A$, 33, 11: P(I, 2) = A$
2471    LOCATE 22, 13: INPUT "ACCEPT ABOVE DATA SCREEN ==> [ Y/N ] "; b$
        IF b$ = "Y" OR b$ = "y" THEN LOCATE 22, 13: PRINT "                    ": GOTO 34
        IF b$ = "N" OR b$ = "n" THEN GOTO 2395
        GOTO 2471
2475    LOCATE 15, 13: PRINT "BEAM NUMBER OF TYPE : "; I
        LOCATE 16, 13: PRINT "-----------------------------------------------------------"
        LOCATE 17, 13: PRINT "                                                          "
        LOCATE 18, 13: PRINT "                                                          "
        LOCATE 19, 13: PRINT "                                                          "
        LOCATE 20, 13: PRINT "                                                          "
        LOCATE 21, 15: PRINT "BEAM NUMBER : "
        E = 15
        F = 17
        G = 1
        FOR I = 1 TO NBT
        FOR J = 1 TO BEAM(I)
        DO
        DATAINPUT A$, 27, 20: O = A$
        IF O = 0 THEN GOTO 2480
        IF O > N THEN GOTO 2480
        IF G > BEAM(I) THEN GOTO 2480
        IF G > N THEN GOTO 2480
        ibdm(O) = I
        IF G = 11 THEN F = 18: E = 15
        IF G = 21 THEN F = 19: E = 15
        LOCATE F, E: PRINT O;
        E = E + 5
        G = G + 1
        LOOP
        NEXT J
        NEXT I
2480    LOCATE 22, 13: INPUT "ACCEPT ABOVE DATA SCREEN [ Y/N ] ==>"; b$
        ON ERROR GOTO 2480
        IF b$ = "Y" OR b$ = "y" THEN GOTO 485
        IF b$ = "N" OR b$ = "n" THEN GOTO 2475
        GOTO 2480
485     NEXT I
        GOTO 100
500     CLS : REM    H
        REM ******** DISK STORE ************
        OPEN "I", #2, "disk.DAT"
        INPUT #2, pr$
        INPUT #2, Da$
        CLOSE
        file1$ = Da$ + ":\MULTDATA\" + FILE$ + ".MUL"
        OPEN "O", #1, file1$
        PRINT #1, FILE$
        PRINT #1, PRO$
        PRINT #1, ENG$
        PRINT #1, UNIT$(1)
        PRINT #1, UNIT$(2)
        PRINT #1, N
        PRINT #1, NBT
        PRINT #1, SPAN
        FOR I = 1 TO N
        PRINT #1, ibdm(I)
        NEXT I
        FOR I = 1 TO NBT
        FOR J = 1 TO 8
        PRINT #1, P(I, J)
        NEXT J
        FOR K = 1 TO 2
        PRINT #1, BTYP$(I, K)
        NEXT K
        NEXT I
        PRINT #1, KEYS$
        PRINT #1, NEXT
        FOR I = 1 TO N - 1
        PRINT #1, ixdm(I)
        NEXT I
```

```
FOR I = 1 TO NBET
FOR J = 1 TO 8
PRINT #1, A(I, J)
NEXT J
NEXT I
PRINT #1, NL
PRINT #1, NNM
PRINT #1, INC
FOR I = 1 TO NL
PRINT #1, B(I)
PRINT #1, V(I)
PRINT #1, U(I)
PRINT #1, C(I)
PRINT #1, E(I)
PRINT #1, TPLDS(I, 1)
PRINT #1, LDN(I)
NEXT I
FOR I = 1 TO NBT
FOR J = 1 TO 4
PRINT #1, YY(I, J)
PRINT #1, ZZ(I, J)
NEXT J
NEXT I
PRINT #1, ISD
PRINT #1, NP
FOR I = 1 TO NP
PRINT #1, X(I)
NEXT I
CLOSE
OPEN "O", #1, "KRON.DAT"
PRINT #1, FILE$
PRINT #1, PRO$
PRINT #1, IMG$
PRINT #1, UNITS(1)
PRINT #1, UNITS(2)
PRINT #1, N
PRINT #1, NBT
PRINT #1, SPAN
FOR I = 1 TO N
PRINT #1, ibdm(I)
NEXT I
FOR I = 1 TO NBT
FOR J = 1 TO 8
PRINT #1, P(I, J)
NEXT J
FOR K = 1 TO 3
PRINT #1, BTYP$(I, K)
NEXT K
NEXT I
PRINT #1, KEYS$
'PRINT #1, NBET
FOR I = 1 TO N - 1
PRINT #1, jsdm(I)
NEXT I
FOR I = 1 TO NBET
FOR J = 1 TO 8
PRINT #1, B(I, J)
NEXT J
NEXT I
PRINT #1, NL
PRINT #1, NNM
PRINT #1, INC
FOR I = 1 TO NL
PRINT #1, B(I)
PRINT #1, V(I)
PRINT #1, U(I)
PRINT #1, C(I)
PRINT #1, E(I)
PRINT #1, TPLDS(I, 1)
PRINT #1, LDN(I)
NEXT I
FOR I = 1 TO NBT
FOR J = 1 TO 4
PRINT #1, YY(I, J)
PRINT #1, ZZ(I, J)
NEXT J
NEXT I
PRINT #1, ISD
PRINT #1, NP
FOR I = 1 TO NP
PRINT #1, X(I)
NEXT I
CLOSE
END
1500  REM B
      LOCATE 5, 31: PRINT "M U L T I B E A M"
      LOCATE 7, 33: PRINT "K H O N K A E N  U N I V E R S I T Y"
      LOCATE 9, 13: PRINT "*************************************************************"
      LOCATE 20, 13: PRINT "*************************************************************"
      RETURN
600   CLS
      FOR I = 1 TO NBT
      IF BTYP$(I, 1) = "RECTANGULAR" THEN GOTO 3395
      IF BTYP$(I, 1) = "TEE SECTION" THEN GOTO 4395
      IF BTYP$(I, 1) = "III SECTION" THEN GOTO 5395
      IF BTYP$(I, 1) = "HOLLOW CORE" THEN GOTO 4395
      IF BTYP$(I, 1) = "BOX SECTION" THEN GOTO 4395
3395  CLS :
      LOCATE 2, 13: PRINT N; " BEAMS ";
      LOCATE 2, 25: PRINT NBT; " TYPE ";
      LOCATE 2, 35: PRINT " SPAN LENGTH ="; SPAN; UNITS(1)
      LOCATE 3, 13: PRINT "------------------------------------------------------------"
      LOCATE 4, 25: PRINT "  BEAM TYPE "; I; "IS "; : PRINT BTYP$(I, 1); "  "
      LOCATE 5, 13: PRINT "DIMENSION (1)        ="; P(I, 3)
      LOCATE 6, 13: PRINT "DIMENSION (2)        ="; P(I, 4)
      LOCATE 7, 13: PRINT "ELASTICITY MODULUS ="; P(I, 1)
      LOCATE 8, 13: PRINT "POISSON RATIO        ="; P(I, 2)
      LOCATE 5, 47: PRINT "*********|*********"
      LOCATE 6, 47: PRINT "*                 *"
      LOCATE 7, 47: PRINT "*                 *2"
      LOCATE 8, 47: PRINT "*                 *"
      LOCATE 9, 47: PRINT "*******************"
      LOCATE 16, 13: PRINT "------------------------------------------------------------"
      LOCATE 20, 13: PRINT "------------------------------------------------------------"
      LOCATE 13, 15: PRINT "BEAM NUMBER OF TYPE : "; I
      G = 1
      E = 15
      F = 17
      FOR O = 1 TO N
      IF G = 11 THEN F = 18: E = 15
      IF G = 21 THEN F = 19: E = 15
      IF ibdm(O) = I THEN LOCATE F, E: PRINT O;
      G = G + 1
      E = E + 3
      NEXT O
      LOCATE 21, 13: INPUT "ENTER TO CONTINUE ....", E$
      GOTO 6485
4395  CLS
      LOCATE 2, 14: PRINT N; " BEAMS "
      LOCATE 2, 25: PRINT NBT; " TYPE "
```

```
LOCATE 2, 35: PRINT " SPAN LENGTH  ="; SPAN; UNITS(1)
LOCATE 3, 13: PRINT "-------------------------------------------------------"
LOCATE 4, 35: PRINT "  BEAM TYPE "; J; "IS "; : PRINT BTYPE(J, 1); " "
LOCATE 5, 15: PRINT "DIMENSION [1]        = "; P(I, 3)
LOCATE 6, 15: PRINT "DIMENSION [2]        = "; P(I, 4)
LOCATE 7, 15: PRINT "DIMENSION [3]        = "; P(I, 5)
LOCATE 8, 15: PRINT "DIMENSION [4]        = "; P(I, 6)
IF BTYPE(J, 1) = "TEE SECTION" THEN LOCATE 9, 15: PRINT "DIMENSION [5]        = "; P(I, 7)
IF BTYPE(J, 1) = "HOLLOW CORE" THEN LOCATE 9, 15: PRINT "CORES                = "; P(I, 7)
IF BTYPE(J, 1) = "BOX SECTION" THEN LOCATE 9, 15: PRINT "BOXES                = "; P(I, 7)
LOCATE 10, 15: PRINT "ELASTICITY MODULUS = "; P(I, 1)
LOCATE 11, 15: PRINT "POISSON RATIO       = "; P(I, 2)
IF BTYPE(J, 1) = "TEE SECTION" THEN LOCATE 5, 47: PRINT "          1       "
IF BTYPE(J, 1) = "TEE SECTION" THEN LOCATE 6, 47: PRINT "******************"
IF BTYPE(J, 1) = "TEE SECTION" THEN LOCATE 7, 47: PRINT "*                * 4"
IF BTYPE(J, 1) = "TEE SECTION" THEN LOCATE 8, 47: PRINT "********   ******* "
IF BTYPE(J, 1) = "TEE SECTION" THEN LOCATE 9, 47: PRINT "       *   *"
IF BTYPE(J, 1) = "TEE SECTION" THEN LOCATE 10, 47: PRINT "       *   * 5"
IF BTYPE(J, 1) = "TEE SECTION" THEN LOCATE 11, 47: PRINT "       *   **"
IF BTYPE(J, 1) = "TEE SECTION" THEN LOCATE 12, 47: PRINT "       ******  "
IF BTYPE(J, 1) = "TEE SECTION" THEN LOCATE 13, 47: PRINT "         2 "
IF BTYPE(J, 1) = "HOLLOW CORE" THEN LOCATE 5, 47: PRINT "          1 "
IF BTYPE(J, 1) = "HOLLOW CORE" THEN LOCATE 6, 47: PRINT "**********************"
IF BTYPE(J, 1) = "HOLLOW CORE" THEN LOCATE 7, 47: PRINT "*    *****  *****    *"
IF BTYPE(J, 1) = "HOLLOW CORE" THEN LOCATE 8, 47: PRINT "*    * 2 *  * 4*    * 3"
IF BTYPE(J, 1) = "HOLLOW CORE" THEN LOCATE 9, 47: PRINT "*    *****  *****    *"
IF BTYPE(J, 1) = "HOLLOW CORE" THEN LOCATE 10, 47: PRINT "**********************"
IF BTYPE(J, 1) = "BOX SECTION" THEN LOCATE 5, 47: PRINT "          1"
IF BTYPE(J, 1) = "BOX SECTION" THEN LOCATE 6, 47: PRINT "********************"
IF BTYPE(J, 1) = "BOX SECTION" THEN LOCATE 7, 47: PRINT "*    ***********    *"
IF BTYPE(J, 1) = "BOX SECTION" THEN LOCATE 8, 47: PRINT "*    *    2   4*    * 3"
IF BTYPE(J, 1) = "BOX SECTION" THEN LOCATE 9, 47: PRINT "*    ***********    *"
IF BTYPE(J, 1) = "BOX SECTION" THEN LOCATE 10, 47: PRINT "********************"
LOCATE 16, 13: PRINT "-------------------------------------------------------"
LOCATE 20, 13: PRINT "-------------------------------------------------------"
LOCATE 15, 15: PRINT "BEAM NUMBER OF TYPE : "; J
G = 1
E = 15
F = 17
FOR O = 1 TO N
IF G = 11 THEN F = 18: E = 15
IF G = 21 THEN F = 19: E = 15
IF Ibom(O) = J THEN LOCATE F, E: PRINT O;
G = G + 1
E = E + 5
NEXT O
LOCATE 22, 14: INPUT "ENTER TO CONTINUE. ===> ", E$
GOTO 6435
5395  CLS
LOCATE 2, 11: PRINT N; " BEAMS "
LOCATE 2, 25: PRINT NBT; " TYPE "
LOCATE 2, 35: PRINT "SPAN LENGTH ="; SPAN; UNITS(1)
LOCATE 3, 13: PRINT "-------------------------------------------------------"
LOCATE 4, 35: PRINT "  BEAM TYPE "; I; "IS "; : PRINT BTYPE(I, 1); "  "
LOCATE 5, 15: PRINT "DIMENSION [1]        = "; P(I, 3)
LOCATE 6, 15: PRINT "DIMENSION [2]        = "; P(I, 4)
LOCATE 7, 15: PRINT "DIMENSION [3]        = "; P(I, 5)
LOCATE 8, 15: PRINT "DIMENSION [4]        = "; P(I, 6)
LOCATE 9, 15: PRINT "DIMENSION [5]        = "; P(I, 7)
LOCATE 10, 15: PRINT "DIMENSION [6]        = "; P(I, 8)
LOCATE 11, 15: PRINT "ELASTICITY MODULUS = "; P(I, 1)
LOCATE 12, 15: PRINT "POISSON RATIO       = "; P(I, 2)
LOCATE 5, 47: PRINT "            1"
LOCATE 6, 47: PRINT "**********************"
LOCATE 7, 47: PRINT "*                    * 4"
LOCATE 8, 47: PRINT "********   2  *******"
LOCATE 9, 47: PRINT "        *     *    "
LOCATE 10, 47: PRINT "        *     * 5"
LOCATE 11, 47: PRINT "        **    **"
LOCATE 12, 47: PRINT "        *     * 6"
LOCATE 13, 47: PRINT "        *********  "
LOCATE 14, 47: PRINT "            3"
LOCATE 16, 13: PRINT "-------------------------------------------------------"
LOCATE 20, 13: PRINT "-------------------------------------------------------"
LOCATE 15, 15: PRINT "BEAM NUMBER OF TYPE : "; I
G = 1
E = 15
F = 17
FOR O = 1 TO N
IF G = 11 THEN F = 18: E = 15
IF G = 21 THEN F = 19: E = 15
IF Ibom(O) = I THEN LOCATE F, E: PRINT O
G = G + 1
E = E + 5
NEXT O
LOCATE 22, 13: INPUT "ENTER TO CONTINUE. ===>", E$
6435  NEXT I
GOTO 100
7000  LOCATE 15, 15: PRINT "====>   THE NO.OF BEAMS EXCEEDS THE STORAGE(30)"
LOCATE 16, 15: PRINT "ANALYSIS IS THEREFORE TERMINATED."
RETURN
8000  LOCATE 15, 15: PRINT "====>THE NO OF BEAM TYPES EXCEEDS THE STORAGE(10)"
'LOCATE 16, 15: PRINT "ANALYSIS IS THEREFORE TERMINATED."
RETURN
END


FUNCTION BufferInput$ (xr$, N%, x1%, y1%, filter$) STATIC
P$ = LEFT$(xr$ + SPACE$(N%), N%)
PTR% = 0
DO
    IF ins% THEN
        LOCATE y1%, x1%, 1, 1, 13
    ELSE
        LOCATE y1%, x1%, 1, 0, 13
    END IF
    PRINT P$;
    LOCATE y1%, x1% + PTR%
    K% = keycode%
    SELECT CASE K%
    CASE backspace
        IF PTR% THEN
            P$ = P$ + " "
            P$ = LEFT$(P$, PTR% - 1) + MID$(P$, PTR% + 1)
            PTR% = PTR% - 1
        END IF
    CASE enter
        BufferInput$ = RTRIM$(P$)
    CASE esc
        BufferInput$ = ""
    CASE homearw
        PTR% = 0
    CASE rightarw
        IF PTR% < (N% - 1) THEN PTR% = PTR% + 1
    CASE leftarw
        IF PTR% THEN PTR% = PTR% - 1
    CASE endarw
        PTR% = N% - 1
    CASE insert
        ins% = NOT ins%
```

```
      CASE delete
         P$ = P$ + " "
         P$ = LEFT$(P$, PTR%) + MID$(P$, PTR% + 2)
      CASE IF < 32, IF > 255
         SOUND 900, 1
         SOUND 700, 1
      CASE ELSE
         IF filter$ = "" OR INSTR(filter$, CHR$(EX%)) THEN
            IF ins% THEN
               P$ = LEFT$(LEFT$(P$, PTR%) + CHR$(EX%) + MID$(P$, PTR% + 1), MX%)
            ELSE
               IF PTR% < MX% THEN MID$(P$, PTR% + 1, 1) = CHR$(EX%)
            END IF
            IF PTR% < (MX% - 1) THEN PTR% = PTR% + 1
         ELSE
            SOUND 900, 1
            SOUND 900, 1
         END IF
      END SELECT
   LOOP UNTIL EX% = enter OR EX% = esc
   LOCATE , , 0
   END FUNCTION


   SUB DATAINPUT (M$, x%, y%) STATIC
      FOR IX = 1 TO maxrow
      FOR JX = 1 TO maxcol
         x1% = (JX - 1) * 3 + x% + 1: y1% = Y% + IX
         DO
            temp$ = VALbufferinput$("", 10, x1%, y1%, "-0123456789eE")
         LOOP UNTIL temp$ >= -3.4023+38 AND temp$ <= 3.4023+38
         M$ = temp$
      NEXT JX
      NEXT IX
   END SUB

   FUNCTION keycode% STATIC
     DO
        P$ = INKEY$
     LOOP UNTIL P$ <> ""
     keycode% = CVI(P$ + CHR$(0))
   END FUNCTION

   SUB keypressed STATIC
      DO

      LOOP WHILE INKEY$ = " "
   END SUB
```

```
REM*******************************************************************
REM                         LOAD.BAS
REM           THIS FILE IS USED FOR RECEIVING LOAD DATA
REM*******************************************************************
DECLARE SUB datainput (m$, x%, y%)
DECLARE FUNCTION keycode% ()
DECLARE FUNCTION Bufferinput$ (st$, N%, x1%, y1%, filter$)
CONST backspace = 8
CONST enter = 13
CONST esc = 27
CONST homearw = 18176
CONST leftarw = 19200
CONST rightarw = 19712
CONST endarw = 20224
CONST insert = 20992
CONST delete = 21248
CONST maxrow = 1, maxcol = 1
DIM x(15)
DIM ibdn(30)
DIM isdn(30)
CLS
OPEN "I", #1, "kimo.DAT"
 INPUT #1, FILE$
 INPUT #1, PRO$
 INPUT #1, ENG$
 INPUT #1, UNITS(1)
 INPUT #1, UNITS(2)
 INPUT #1, N
 INPUT #1, NBT
 INPUT #1, SPAN
FOR i = 1 TO N
 INPUT #1, ibdn(i)
NEXT i
FOR i = 1 TO NBT
FOR J = 1 TO 8
 INPUT #1, P(i, J)
NEXT J
FOR K = 1 TO 2
 INPUT #1, BTYP$(i, K)
NEXT K
NEXT I
 INPUT #1, KEYS$
 INPUT #1, NSET
FOR i = 1 TO N - 1
 INPUT #1, isdn(i)
NEXT i
FOR i = 1 TO NSET
FOR J = 1 TO 8
 INPUT #1, S(i, J)
NEXT J
NEXT i
 INPUT #1, a1
 INPUT #1, NHM
 INPUT #1, INC
FOR i = 1 TO n1
 INPUT #1, R(i)
 INPUT #1, V(i)
 INPUT #1, U(i)
 INPUT #1, C(i)
 INPUT #1, E(i)
 INPUT #1, TPLD$(i, 1)
 INPUT #1, LDN(i)
NEXT i
FOR i = 1 TO NBT
FOR J = 1 TO 4
 INPUT #1, YY(i, J)
 INPUT #1, ZZ(i, J)
NEXT J
NEXT i
 INPUT #1, ISD
 INPUT #1, NP
FOR i = 1 TO NP
 INPUT #1, x(i)
NEXT i
CLOSE
100   CLS :
      GOSUB 1500
      LOCATE 9, 33: PRINT "  LOAD DATA  "
      LOCATE 11, 18: PRINT "SELECT NEXT ACTION :"
      LOCATE 11, 37: PRINT "< I >  INPUT DATA"
      LOCATE 12, 37: PRINT "< P >  PRINT DATA"
      LOCATE 15, 37: PRINT "< E >   EXIT TO DATA MODE"
200   LOCATE 21, 13: INPUT "ENTER YOUR SELECTION  = "; Z$
      ON ERROR GOTO 100
      IF Z$ = "E" OR Z$ = "e" THEN GOTO 500
      IF Z$ = "I" OR Z$ = "i" THEN GOTO 210
      IF Z$ = "P" OR Z$ = "p" THEN GOTO 220
      GOTO 200
210   a$ = "INPUT": GOTO 300
220   a$ = "PRINT": GOTO 600
300   CLS : GOSUB 1500
      LOCATE 9, 33: PRINT "    "; a$; "    "
      LOCATE 11, 15: PRINT "NUMBER OF LOAD                    ="
      LOCATE 12, 15: PRINT "NUMBER OF HARMONICS               ="
      LOCATE 13, 15: PRINT "INCREMENT OF HARMONIC             ="
      datainput m$, 55, 10: a1 = m$
      IF a1 > 10 THEN LOCATE 15, 15: PRINT "=====>THE NO. OF LOAD TYPE EXCEEDS",
      IF a1 > 10 THEN PRINT "                        THE DIMENSION STORAGE (10)."
      IF a1 > 10 THEN LOCATE 22, 13: INPUT "ENTER TO CONTINUE ==> ", Z$: GOTO 300
      datainput m$, 55, 11: NHM = m$
      datainput m$, 55, 12: INC = m$
360   LOCATE 22, 13: INPUT "ACCEPT ABOVE DATA SCREEN ( Y/N ) ==> "; B$
      ON ERROR GOTO 360
      IF B$ = "Y" OR B$ = "y" THEN GOTO 370
      IF B$ = "N" OR B$ = "n" THEN GOTO 300
      GOTO 360
370   CLS : GOSUB 1500
      FOR i = 1 TO n1
      CLS : GOSUB 1500
      LOCATE 9, 33: PRINT "    LOAD NO."; i; "    "
      LOCATE 11, 20: PRINT "LOAD MAGNITUDE                  ="
      LOCATE 12, 20: PRINT "WIDTH OF LOADS                  ="
      LOCATE 13, 20: PRINT "LENGTH OF LOADS                 ="
      LOCATE 14, 20: PRINT "LONGITU. CENTROID               ="
      LOCATE 15, 20: PRINT "LOAD ECCENTRICITY               ="
      LOCATE 16, 20: PRINT "THE BEAM ON WHICH THE LOAD ACTS  ="
      datainput m$, 55, 10: R(i) = m$
      datainput m$, 55, 11: V(i) = m$
      datainput m$, 55, 12: U(i) = m$
      datainput m$, 55, 13: C(i) = m$
      datainput m$, 55, 14: E(i) = m$
      datainput m$, 55, 15: LDN(i) = m$
375   LOCATE 22, 13: INPUT "ACCEPT ABOVE DATA SCREEN ( Y/N ) ==> "; B$
      ON ERROR GOTO 376
      IF B$ = "Y" OR B$ = "y" THEN GOTO 380
      IF B$ = "N" OR B$ = "n" THEN GOTO 370
      GOTO 376
380   CLS : GOSUB 1500
      LOCATE 9, 33: PRINT "    LOAD NO. ="; i; "    "
      LOCATE 11, 13: PRINT "SELECT LOAD TYPE"
```

```
    LOCATE 11, 37: PRINT "< 1 >   CONCENTRATED    "
    LOCATE 12, 37: PRINT "< 2 >   UNIFORM         "
381 LOCATE 21, 13: PRINT "WHAT IS TYPE OF LOAD  =  ";
    datainput a$, 37, 20: TPLD(i, 1) = a$
    ON ERROR GOTO 381
    IF TPLD(i, 1) = 1 THEN TPLD$(i, 1) = "CONCEN"
    IF TPLD(i, 1) = 2 THEN TPLD$(i, 1) = "UNIFOR"
    IF TPLD(i, 1) < 1 OR TPLD(i, 1) > 2 THEN GOTO 380
385 LOCATE 23, 13: INPUT "ACCEPT ABOVE DATA SCREEN [ Y/N ] ==>> "; B$
    ON ERROR GOTO 385
    IF B$ = "Y" OR B$ = "y" THEN GOTO 386
    IF B$ = "N" OR B$ = "n" THEN GOTO 380
    GOTO 385
386 NEXT i
    GOTO 300
500 CLS
    REM ******** DISK STORE ************
    OPEN "I", #2, "disk.DAT"
     INPUT #2, pr$
     INPUT #2, Da$
    CLOSE
    FILE1$ = Da$ + ":\MULTDATA\" + FILE$ + ".MUL"
    OPEN "O", #1, FILE1$
    PRINT #1, FILE$
    PRINT #1, PRO$
    PRINT #1, ENG$
    PRINT #1, UNIT$(1)
    PRINT #1, UNIT$(2)
    PRINT #1, N
    PRINT #1, NST
    PRINT #1, SPAN
    FOR i = 1 TO N
    PRINT #1, ibdn(i)
    NEXT i
    FOR i = 1 TO NST
    FOR J = 1 TO 8
    PRINT #1, P(i, J)
    NEXT J
    FOR K = 1 TO 2
    PRINT #1, STYP$(i, K)
    NEXT K
    NEXT i
    PRINT #1, KEYE$
    PRINT #1, NKET
    FOR i = 1 TO N - 1
    PRINT #1, isdn(i)
    NEXT i
    FOR i = 1 TO NKET
    FOR J = 1 TO 8
    PRINT #1, S(i, J)
    NEXT J
    NEXT i
    PRINT #1, nl
    PRINT #1, NUM
    PRINT #1, INC
    FOR i = 1 TO nl
    PRINT #1, R(i)
    PRINT #1, V(i)
    PRINT #1, H(i)
    PRINT #1, C(i)
    PRINT #1, E(i)
    PRINT #1, TPLD$(i, 1)
    PRINT #1, LDN(i)
    NEXT i
    FOR i = 1 TO NST
    FOR J = 1 TO 4
    PRINT #1, YY(i, J)
    PRINT #1, ZZ(i, J)
    NEXT J
    NEXT i
    PRINT #1, ISD
    PRINT #1, NP
    FOR i = 1 TO NP
    PRINT #1, x(i)
    NEXT i
    CLOSE
    OPEN "O", #1, "KBON.DAT"
    PRINT #1, FILE$
    PRINT #1, PRO$
    PRINT #1, ENG$
    PRINT #1, UNIT$(1)
    PRINT #1, UNIT$(2)
    PRINT #1, N
    PRINT #1, NST
    PRINT #1, SPAN
    FOR i = 1 TO N
    PRINT #1, ibdn(i)
    NEXT i
    FOR i = 1 TO NST
    FOR J = 1 TO 8
    PRINT #1, P(i, J)
    NEXT J
    FOR K = 1 TO 2
    PRINT #1, STYP$(i, K)
    NEXT K
    NEXT i
    PRINT #1, KEYE$
    PRINT #1, NKET
    FOR i = 1 TO N - 1
    PRINT #1, isdn(i)
    NEXT i
    FOR i = 1 TO NKET
    FOR J = 1 TO 8
    PRINT #1, S(i, J)
    NEXT J
    NEXT i
    PRINT #1, nl
    PRINT #1, NUM
    PRINT #1, INC
    FOR i = 1 TO nl
    PRINT #1, R(i)
    PRINT #1, V(i)
    PRINT #1, H(i)
    PRINT #1, C(i)
    PRINT #1, E(i)
    PRINT #1, TPLD$(i, 1)
    PRINT #1, LDN(i)
    NEXT i
    FOR i = 1 TO NST
    FOR J = 1 TO 4
    PRINT #1, YY(i, J)
    PRINT #1, ZZ(i, J)
    NEXT J
    NEXT i
    PRINT #1, ISD
    PRINT #1, NP
    FOR i = 1 TO NP
    PRINT #1, x(i)
    NEXT i
    CLOSE
```

```
        END
        GOTO 100
1500    REM    M
        LOCATE 3, 31: PRINT "M U L T I B E A M"
        LOCATE 7, 22: PRINT "R O N S A E N   U N I V E R S I T Y"
        LOCATE 5, 10: PRINT "************************************************************"
        LOCATE 20, 13: PRINT "************************************************************"
        RETURN
600     CLS
        FOR i = 1 TO nl
        LOCATE 2, 20: PRINT nl; " LOAD "
        LOCATE 3, 30: PRINT " HARMONIC DESCRIPTION  = "; NHM; "@"; INC
        LOCATE 3, 13: PRINT "------------------------------------------------------------"
        LOCATE 4, 15: PRINT "LOAD NO."; i; "  UNIT OF FORCES = "; UNITS(2)
        LOCATE 5, 20: PRINT "LOAD MAGNITUDE                         ="; H(i)
        LOCATE 6, 20: PRINT "WIDTH OF LOADS                         ="; V(i)
        LOCATE 7, 20: PRINT "LENGTH OF LOADS                        ="; U(i)
        LOCATE 8, 20: PRINT "LONGITUDINAL CENTROID                  ="; C(i)
        LOCATE 9, 20: PRINT "LOAD ECCENTRICITY                      ="; E(i)
        LOCATE 10, 20: PRINT "THE BEAM ON WHICH THIS LOAD ACTS ="; LDN(I)
        LOCATE 11, 20: PRINT "LOAD TYPE (CONCENTRATED,UNIFORM) = "; TPLD$(i, 1)
        LOCATE 21, 13: PRINT "------------------------------------------------------------"
        LOCATE 23, 13: INPUT "ENTER TO CONTINUE ==> ", Z$
        NEXT i
        GOTO 100
        END


FUNCTION Bufferinput$ (xr$, N%, x1%, y1%, filter$) STATIC
P$ = LEFT$(xr$ + SPACE$(N%), N%)
PTR% = 0
DO
     IF ins% THEN
        LOCATE y1%, x1%, 1, 1, 12
     ELSE
        LOCATE y1%, x1%, 1, 6, 12
     END IF
     PRINT P$;
     LOCATE y1%, x1% + PTR%
     K% = keycode%
     SELECT CASE K%
     CASE backspace
        IF PTR% THEN
           P$ = P$ + " "
           P$ = LEFT$(P$, PTR% - 1) + MID$(P$, PTR% + 1)
           PTR% = PTR% - 1
        END IF
   CASE enter
        Bufferinput$ = RTRIM$(P$)
   CASE esc
       'Bufferinput$ = ""
   CASE homearw
        PTR% = 0
   CASE rightarw
        IF PTR% < (N% - 1) THEN PTR% = PTR% + 1
   CASE leftarw
        IF PTR% THEN PTR% = PTR% - 1
   CASE endarw
        PTR% = N% - 1
   CASE insert
        ins% = NOT ins%
   CASE delete
        P$ = P$ + " "
        P$ = LEFT$(P$, PTR%) + MID$(P$, PTR% + 2)
   CASE K% < 32, K% > 255
        SOUND 900, 1
        SOUND 700, 1
     CASE ELSE
        IF (filter$ = "" OR INSTR(filter$, CHR$(K%))) THEN
           IF ins% THEN
              P$ = LEFT$(LEFT$(P$, PTR%) + CHR$(K%) + MID$(P$, PTR% + 1), N%)
           ELSE
              IF PTR% < N% THEN MID$(P$, PTR% + 1, 1) = CHR$(K%)
           END IF
           IF PTR% < (N% - 1) THEN PTR% = PTR% + 1
        ELSE
           SOUND 900, 1
           SOUND 700, 1
        END IF
     END SELECT
LOOP UNTIL K% = enter OR K% = esc
LOCATE , , 0
END FUNCTION


SUB datainput (M!, x%, y%) STATIC
   FOR i% = 1 TO maxrow
   FOR J% = 1 TO maxcol
      x1% = (J% - 1) * 7 + x% + 1: y1% = y% + i%
      DO
        temp# = VAL(Bufferinput$("", 11, x1%, y1%, ".-0123456789"))
      LOOP UNTIL temp# >= -3.402E+38 AND temp# <= 3.402E+38
      M! = temp#
   NEXT J%
   NEXT i%
END SUB

FUNCTION keycode% STATIC
  DO
     P$ = INKEY$
  LOOP UNTIL P$ <> ""
  keycode% = CVI(P$ + CHR$(0))
END FUNCTION

SUB keypressed STATIC
   DO
   LOOP WHILE INKEY$ = " "
END SUB
```

```
REM*************************************************************
REM                         POINT.BAS
REM     THIS FILE IS USED FOR RECEIVING DATA CONCERNING
REM     THE POINT DETERMINATION ON BEAM
REM*************************************************************
DECLARE SUB datainput (a$, x%, y%)
DECLARE FUNCTION keycode% ()
DECLARE FUNCTION Bufferinput$ (xr$, n%, x1%, y1%, filter$)
CONST backspace = 8
CONST enter = 13
CONST esc = 27
CONST downarr = 18176
CONST leftarr = 19200
CONST rightarr = 19712
CONST endarr = 20224
CONST insert = 20992
CONST delete = 21248
CONST maxrow = 3, maxcol = 1
CLS
DIM x(15), isdn(30), ibdn(30)
OPEN "I", #1, "XHON.DAT"
 INPUT #1, FILE$
 INPUT #1, PRO$
 INPUT #1, ENG$
 INPUT #1, UNIT$(1)
 INPUT #1, UNIT$(2)
 INPUT #1, n
 INPUT #1, NBT
 INPUT #1, SPAN
FOR I = 1 TO n
 INPUT #1, ibdn(I)
NEXT I
FOR I = 1 TO NBT
FOR J = 1 TO 8
 INPUT #1, P(I, J)
NEXT J
FOR K = 1 TO 2
 INPUT #1, BTYPE(I, K)
NEXT K
NEXT I
 INPUT #1, KEY$
 INPUT #1, NSET
FOR I = 1 TO n - 1
 INPUT #1, isdn(I)
NEXT I
FOR I = 1 TO NSET
FOR J = 1 TO 8
 INPUT #1, S(I, J)
NEXT J
NEXT I
 INPUT #1, NL
 INPUT #1, MOM
 INPUT #1, INC
FOR I = 1 TO NL
 INPUT #1, R(I)
 INPUT #1, V(I)
 INPUT #1, D(I)
 INPUT #1, C(I)
 INPUT #1, E(I)
 INPUT #1, TPLD$(I, 1)
 INPUT #1, LDM(I)
NEXT I
FOR I = 1 TO NBT
FOR J = 1 TO 4
 INPUT #1, YY(I, J)
 INPUT #1, ZZ(I, J)
NEXT J
NEXT I
 INPUT #1, IAD
 INPUT #1, np
FOR I = 1 TO np
 INPUT #1, x(I)
NEXT I
CLOSE
100     CLS
GOSUB 1500
LOCATE 9, 30: PRINT "    SPECIFY POINTS    "
LOCATE 11, 13: PRINT "SELECT NEXT ACTION :"
LOCATE 11, 35: PRINT "< I >  INPUT DATA"
LOCATE 12, 35: PRINT "< P >  PRINT DATA"
LOCATE 13, 35: PRINT "< E >   EXIT TO DATA MODE"
200     LOCATE 22, 13: INPUT "ENTER YOUR SELECTION  = "; s$
ON ERROR GOTO 200
IF s$ = "E" OR s$ = "e" THEN GOTO 250
IF s$ = "I" OR s$ = "i" THEN GOTO 210
IF s$ = "P" OR s$ = "p" THEN GOTO 230
GOTO 200
210     a$ = "INPUT": GOTO 300
230     a$ = "PRINT": GOTO 600
240     GOTO 100
250     GOTO 500: END
300     CLS : GOSUB 1500
390     FOR I = 1 TO NBT
395     CLS : GOSUB 1500
LOCATE 9, 12: PRINT "  BEAM TYPE "; I; " "
LOCATE 11, 15: PRINT "YY("; I; ", 1)   = "
LOCATE 12, 15: PRINT "ZZ("; I; ", 1)   = "
LOCATE 13, 15: PRINT "YY("; I; ", 2)   = "
LOCATE 14, 15: PRINT "ZZ("; I; ", 2)   = "
LOCATE 15, 15: PRINT "YY("; I; ", 3)   = "
LOCATE 16, 15: PRINT "ZZ("; I; ", 3)   = "
LOCATE 17, 15: PRINT "YY("; I; ", 4)   = "
LOCATE 18, 15: PRINT "ZZ("; I; ", 4)   = "
LOCATE 11, 40: PRINT "         ---------------, YY"
LOCATE 12, 40: PRINT "****************   :"
LOCATE 13, 40: PRINT "*               *  :"
LOCATE 14, 40: PRINT "*               *  :"
LOCATE 15, 40: PRINT "****************   : "
LOCATE 16, 40: PRINT "                   ZZ "
LOCATE 17, 40: PRINT "        *"
datainput a$, 30, 10: YY(I, 1) = a$
datainput a$, 30, 11: ZZ(I, 1) = a$
datainput a$, 30, 12: YY(I, 2) = a$
datainput a$, 30, 13: ZZ(I, 2) = a$
datainput a$, 30, 14: YY(I, 3) = a$
datainput a$, 30, 15: ZZ(I, 3) = a$
datainput a$, 30, 16: YY(I, 4) = a$
datainput a$, 30, 17: ZZ(I, 4) = a$
480     LOCATE 21, 13: INPUT "ACCEPT ABOVE DATA SCREEN ( Y/N ) ===> ", B$
ON ERROR GOTO 480
IF B$ = "Y" OR B$ = "y" THEN GOTO 489
IF B$ = "N" OR B$ = "n" THEN GOTO 395
GOTO 480
489     NEXT I
490     CLS : GOSUB 1500
np = 11
LOCATE 11, 13: PRINT "- NUMBER OF POINT ALONG THE BEAM AT WHICH ALL"
LOCATE 12, 13: PRINT "  RESULTS WILL BE CALCULATED   =   11  POINTS"
LOCATE 13, 13: PRINT "-------------------------------------------------------"
```

```
     x(1) = 0: x(2) = .1: x(3) = .2: x(4) = .3: x(5) = .4: x(6) = .5
     x(7) = .6: x(8) = .7: x(9) = .8: x(10) = .9: x(11) = 1
     LOCATE 14, 15: PRINT "POINT( 1) = "; : PRINT USING "#.###"; x(1);   PRINT "L"
     LOCATE 15, 15: PRINT "POINT( 2) = "; : PRINT USING "#.###"; x(2); : PRINT "L"
     LOCATE 16, 15: PRINT "POINT( 3) = "; : PRINT USING "#.###"; x(3); : PRINT "L"
     LOCATE 17, 15: PRINT "POINT( 4) = "; : PRINT USING "#.###"; x(4); : PRINT "L"
     LOCATE 18, 15: PRINT "POINT( 5) = "; : PRINT USING "#.###"; x(5); : PRINT "L"
     LOCATE 19, 15: PRINT "POINT( 6) = "; : PRINT USING "#.###"; x(6); : PRINT "L"
     LOCATE 14, 40: PRINT "POINT( 7) = "; : PRINT USING "#.###"; x(7); : PRINT "L"
     LOCATE 15, 40: PRINT "POINT( 8) = "; : PRINT USING "#.###"; x(8); : PRINT "L"
     LOCATE 16, 40: PRINT "POINT( 9) = "; : PRINT USING "#.###"; x(9); : PRINT "L"
     LOCATE 17, 40: PRINT "POINT(10) = "; : PRINT USING "#.###"; x(10); : PRINT "L"
     LOCATE 18, 40: PRINT "POINT(11) = "; : PRINT USING "#.###"; x(11); : PRINT "L"
     LOCATE 22, 15: INPUT "ACCEPT ABOVE DATA SCREEN [ Y/N ] ==== ", B$
     ON ERROR GOTO 490
     IF B$ = "N" OR B$ = "n" THEN GOTO 491
     IF B$ = "Y" OR B$ = "y" THEN GOTO 500
     GOTO 490
491  CLS : GOSUB 1500
     LOCATE 11, 13: PRINT "- NUMBER OF POINT ALONG THE BEAM AT WHICH ALL"
     LOCATE 12, 13: PRINT "  RESULTS WILL BE CALCULATED   =        POINTS"
     datainput a$, 50, 11: np = a$
494  LOCATE 22, 13: INPUT "ACCEPT ABOVE DATA SCREEN [ Y/N ] ==== ", B$
     ON ERROR GOTO 494
     IF B$ = "N" OR B$ = "n" THEN GOTO 491
     IF B$ = "Y" OR B$ = "y" THEN GOTO 495
     GOTO 494
495  CLS : GOSUB 1500
     FOR I = 1 TO np
     IF I > 9 GOTO 495
     LOCATE I + 5, 15: PRINT "POINT("; I; ")      ="
     IF I > 9 THEN GOTO 495
     NEXT I
495  FOR I = 1 TO np
     IF I > 9 GOTO 496
     datainput a$, 31, I + 5: x(I) = a$
     NEXT I
     GOTO 497
496  FOR I = 10 TO np
     LOCATE I, 40: PRINT "POINT("; I; ")      ="
     NEXT I
     FOR I = 10 TO np
     datainput a$, 58, I - 1: x(I) = a$
     NEXT I
497  LOCATE 22, 13: INPUT "ACCEPT ABOVE DATA SCREEN [ Y/N ] ==== ", B$
     ON ERROR GOTO 497
     IF B$ = "Y" OR B$ = "y" THEN GOTO 500
     IF B$ = "N" OR B$ = "n" THEN GOTO 495
     GOTO 497
500  CLS
     REM ******** DISK STORE ************
     OPEN "I", #2, "disk.DAT"
     INPUT #2, pr$
     INPUT #2, DA$
     CLOSE
     FILE1$ = DA$ + ":\MULTDATA\" + FILE$ + ".MUL"
     OPEN "O", #1, FILE1$
     PRINT #1, FILE$
     PRINT #1, PRO$
     PRINT #1, ENG$
     PRINT #1, UNIT$(1)
     PRINT #1, UNIT$(2)
     PRINT #1, n
     PRINT #1, NBT
     PRINT #1, SPAN
     FOR I = 1 TO n
     PRINT #1, ibdn(I)
     NEXT I
     FOR I = 1 TO NBT
     FOR J = 1 TO 8
     PRINT #1, P(I, J)
     NEXT J
     FOR K = 1 TO 2
     PRINT #1, BTYP$(I, K)
     NEXT K
     NEXT I
     PRINT #1, KEY$$
     PRINT #1, NEKT
     FOR I = 1 TO n - 1
     PRINT #1, indn(I)
     NEXT I
     FOR I = 1 TO NEKT
     FOR J = 1 TO 2
     PRINT #1, E(I, J)
     NEXT J
     NEXT I
     PRINT #1, NL
     PRINT #1, NNN
     PRINT #1, INC
     FOR I = 1 TO NL
     PRINT #1, R(I)
     PRINT #1, T(I)
     PRINT #1, D(I)
     PRINT #1, C(I)
     PRINT #1, E(I)
     PRINT #1, TPLD$(I, 1)
     PRINT #1, LDR(I)
     NEXT I
     FOR I = 1 TO NBT
     FOR J = 1 TO 4
     PRINT #1, YY(I, J)
     PRINT #1, ZZ(I, J)
     NEXT J
     NEXT I
     PRINT #1, ISD
     PRINT #1, np
     FOR I = 1 TO np
     PRINT #1, x(I)
     NEXT I
     CLOSE
     OPEN "O", #1, "EMON.DAT"
     PRINT #1, FILE$
     PRINT #1, PRO$
     PRINT #1, ENG$
     PRINT #1, UNIT$(1)
     PRINT #1, UNIT$(2)
     PRINT #1, n
     PRINT #1, NBT
     PRINT #1, SPAN
     FOR I = 1 TO n
     PRINT #1, ibdn(I)
     NEXT I
     FOR I = 1 TO NBT
     FOR J = 1 TO 8
     PRINT #1, P(I, J)
     NEXT J
     FOR K = 1 TO 2
     PRINT #1, BTYP$(I, K)
     NEXT K
     NEXT I
```

```
PRINT #1, KEYS$
PRINT #1, NSET
FOR I = 1 TO n - 1
PRINT #1, redn(I)
NEXT I
FOR I = 1 TO NSET
FOR J = 1 TO 5
PRINT #1, S(I, J)
NEXT J
NEXT I
PRINT #1, NL
PRINT #1, NMM
PRINT #1, INC
FOR I = 1 TO NL
PRINT #1, B(I)
PRINT #1, V(I)
PRINT #1, U(I)
PRINT #1, C(I)
PRINT #1, E(I)
PRINT #1, TPLDS(1, I)
PRINT #1, LBN(I)
NEXT I
FOR I = 1 TO NBT
FOR J = 1 TO 4
PRINT #1, YY(I, J)
PRINT #1, ZZ(I, J)
NEXT J
NEXT I
PRINT #1, IND
PRINT #1, np
FOR I = 1 TO np
PRINT #1, x(I)
NEXT I
CLOSE
END
GOTO 100
1500 REM  H
LOCATE 5, 31: PRINT "M U L T I B E A M"
LOCATE 7, 22: PRINT "K H O N K A E N   U N I V E R S I T Y"
LOCATE 9, 13: PRINT "**********************************************************"
LOCATE 10, 13: PRINT "**********************************************************"
RETURN
600 FOR I = 1 TO NBT
CLS
PRINT
PRINT "          COORDINATES OF 4 POINTS AT WHICH STRESSES WILL BE CALCULATED"
PRINT "      ------------------------------------------------------------------"
PRINT "            BEAM TYPE "; I; "  ( YY , ZZ ) "
PRINT "                POINT 1 = ("; YY(I, 1); ","; ZZ(I, 1); ")"
PRINT "                POINT 2 = ("; YY(I, 2); ","; ZZ(I, 2); ")"
PRINT "                POINT 3 = ("; YY(I, 3); ","; ZZ(I, 3); ")"
PRINT "                POINT 4 = ("; YY(I, 4); ","; ZZ(I, 4); ")"
LOCATE 23, 6: PRINT "--------------------------------------------------------------------"
LOCATE 24, 13: INPUT "ENTER TO CONTINUE ==>> ", Q
NEXT I
CLS
PRINT
PRINT "          NUMBER OF POINT ALONG THE BEAM WHICH"
PRINT "          ALL RESULTS WILL BE CALCULATED = "; np; " POINTS"
PRINT "      ------------------------------------------------------------------"
IF np = 1 OR np = 4 OR np = 7 OR np = 10 OR np = 13 THEN np1 = np / 3 + 1
IF np = 2 OR np = 5 OR np = 8 OR np = 11 OR np = 14 THEN np1 = np / 3 + .41
IF np = 3 OR np = 6 OR np = 9 OR np = 12 OR np = 15 THEN np1 = np / 3 + .1
FOR I = 1 TO np1
PRINT "          X(";
PRINT USING "##"; I;
PRINT " ) = ";
PRINT USING "#.###"; x(I);
PRINT "L";
y = np1 - .3
IF y + I > np THEN GOTO 704
PRINT "     X(";
PRINT USING "##"; y + I;
PRINT " ) = ";
PRINT USING "#.###"; x(y + I);
PRINT "L";
z = np1 * 2 - .3
IF z + I > np + .34 THEN GOTO 704
PRINT "     X(";
PRINT USING "##"; z + I;
PRINT " ) = ";
PRINT USING "#.###"; x(z + I);
PRINT "L";
700 NEXT I
705 LOCATE 23, 7: PRINT "--------------------------------------------------------------------"
710 LOCATE 24, 13: INPUT "ENTER TO CONTINUE ==>>", Q
GOTO 100
END


FUNCTION Bufferinput$ (xr$, n%, x1%, y1%, filter$) STATIC
P$ = LEFT$(xr$ + SPACE$(n%), n%)
PTR% = 0
DO
    IF ins% THEN
        LOCATE y1%, x1%, 1, 1, 12
    ELSE
        LOCATE y1%, x1%, 1, 6, 12
    END IF
    PRINT P$;
    LOCATE y1%, x1% + PTR%
    K% = keycode%
    SELECT CASE K%
    CASE backspace
        IF PTR% THEN
            P$ = P$ + " "
            P$ = LEFT$(P$, PTR% - 1) + MID$(P$, PTR% + 1)
            PTR% = PTR% - 1
        END IF
  CASE enter
        Bufferinput$ = RTRIM$(P$)
  CASE esc
        Bufferinput$ = ""
  CASE homearw
        PTR% = 0
  CASE rightarw
        IF PTR% < (n% - 1) THEN PTR% = PTR% + 1
  CASE leftarw
        IF PTR% THEN PTR% = PTR% - 1
  CASE endarw
        PTR% = n% - 1
  CASE insert
        ins% = NOT ins%
  CASE delete
        P$ = P$ + " "
        P$ = LEFT$(P$, PTR%) + MID$(P$, PTR% + 2)
  CASE IS < 32, IS > 255
        SOUND 900, 1
        SOUND 700, 1
```

```
      CASE ELSE
         IF filter$ = "" OR INSTR(filter$, CHR$(KX)) THEN
            IF ins% THEN
               P$ = LEFT$(LEFT$(P$, PTR%) + CHR$(KX) + MID$(P$, PTR% + 1), m%)
            ELSE
               IF PTR% < m% THEN MID$(P$, PTR% + 1, 1) = CHR$(KX)
            END IF
            IF PTR% < (m% - 1) THEN PTR% = PTR% + 1
         ELSE
            SOUND 900, 1
            SOUND 700, 1
         END IF
      END SELECT
   LOOP UNTIL KX = enter OR KX = esc
   LOCATE , , 0
   END FUNCTION


   SUB datainput (M#, x%, y%) STATIC
      FOR I% = 1 TO maxrow
      FOR J% = 1 TO maxcol
         x1% = (J% - 1) * 7 + x% + 1: y1% = y% + I%
         DO
            temp$ = VAL(Buffersnput$("", 9, x1%, y1%, ".-0123456789"))
         LOOP UNTIL temp$ >= -3.402E+38 AND temp$ <= 3.402E+38
         M# = temp$
      NEXT J%
      NEXT I%
   END SUB

   FUNCTION keycode% STATIC
     DO
        P$ = INKEY$
     LOOP UNTIL P$ <> ""
     keycode% = CVI(P$ + CHR$(0))
   END FUNCTION

   SUB keypressed STATIC
      DO
      LOOP WHILE INKEY$ <> ""
   END SUB
```

```
REM*************************************************************************
REM                                       LOGO.BAS
REM                          THIS FILE IS THE SYMBOL OF PROGRAM
REM*************************************************************************
CLS
SCREEN 2
PALETTE 1, 7
LOCATE 3, 5: PRINT "********************************************************************"
LOCATE 5, 12: PRINT "A N A L Y S I S   M U L T I B E A M   S T R U C T U R E"
LOCATE 6, 34: PRINT "( A M S )"
LOCATE 8, 5: PRINT "********************************************************************"
LOCATE 10, 33: PRINT "developed by"
LOCATE 12, 24: PRINT "C.  V A D H A N A V I K K I T"
LOCATE 13, 22: PRINT "S.  N A N T H A P I C H A T S I D I"
LOCATE 15, 5: PRINT "********************************************************************"
LOCATE 17, 25: PRINT "K H O N K A E N   U N I V E R S I T Y"
LOCATE 18  33: PRINT "Copyright 1994"
LOCATE 20, 27: PRINT "Press any key to continue"
WHILE INKEY$ = ""
WEND
END
```

```
REM*****************************************************************
REM                         CALCU.BAS
REM              THIS FILE IS USED FOR SELECTING
REM                      THE KEY ASSUMPTION
REM*****************************************************************
OPEN "I", #2, "disk.dat"
 INPUT #2, PR$
 INPUT #2, da$
CLOSE #2
OPEN "I", #4, "KAEN.DAT"
 INPUT #4, FILE$
 INPUT #4, PRO$
 INPUT #4, KEY$$
 INPUT #4, mg$
CLOSE #4
IF KEY$$ = "SPRING TYPE" THEN A$ = PR$ + ":\MULTPRO\SPRSOLB.EXE"
IF KEY$$ = "PLATE TYPE" THEN A$ = PR$ + ":\MULTPRO\PLASOLU.EXE"
IF KEY$$ = "TRUSS TYPE" THEN A$ = PR$ + ":\MULTPRO\TRUSOLB.EXE"
SHELL A$
END
```

```
10  REM************************************************************************
20  REM                          SPREDLU.BAS
30  REM     THIS PROGRAM ENABLES THE ANALYSIS OF SIMPLY SUPPORTED MULTIBEAM
40  REM               STRUCTURES WITH SPRING TYPE SHEAR KEYS
100 REM************************************************************************
    CLS
    '$DYNAMIC
    DIM NEQ(40)
    DIM UNIT$(2), NSET, rad, ASINE(15), ACOS(15), T(15)
    DIM P#(10, 8), SA#(10), YBMI#(10), ZBMI#(10), TBTJ#(10), G#(10), BTYP$(10, 2)
    DIM S(10, 5), yy(10, 4), zz(10, 4), MF(29, 21), BF(10, 4)
    DIM B(15), V(15), U(15), C(15), A(15), TPLD#(15, 2), LDN(15), X(15)
    DIM D#(29, 5), DLF(29, 4, 15), DM(29, 4, 15), FSF(15, 4, 15), SDN(29)
    DIM SK#(120, 40), NR#(120), ibdn(30), FB#(30, 6, 15), zerr(30, 4, 15), JJ(120)
    OPEN "I", #3, "disk.DAT"
     INPUT #3, Frs
     INPUT #3, DAS
    CLOSE #3
    OPEN "I", #1, "KNOW.DAT"
200 LC = 0
210 KK = 1
220 GOSUB 500:   REM GOSUB (CBIPTS(KK))
    IF KK - 1 = 0 THEN GOTO 250
230 IF KK - 1 < 0 OR KK - 1 > 0 THEN END
250 GOSUB 2500:  REM GOSUB (CBOPTS)
260 GOSUB 3000:  REM GOSUB (CBIPTS(KK))
    IF KK - 1 = 0 THEN GOTO 340
270 IF KK - 1 < 0 OR KK - 1 > 0 THEN END
340 GOSUB 3700:  REM GOSUB (CLTPTS(KK,LC))
    IF KK - 1 = 0 THEN GOTO 370
350 IF KK - 1 < 0 OR KK - 1 > 0 THEN END
370 CLS
    LOCATE 5, 31:  PRINT "M U L T I B E A M"
    LOCATE 7, 22:  PRINT "S H O N K A R N   U N I V E R S I T Y"
    LOCATE 9, 13:  PRINT "**************************************************"
    LOCATE 10, 13: PRINT "**************************************************"
    LOCATE 12, 33: PRINT "PLEASE WAIT"
    LOCATE 14, 20: PRINT "RESULT IS IN THE PROCESS OF CALCULATION"
    FOR NN = 1 TO NNN STEP INC
    REM *******************************************************************
    LOCATE 16, 35: PRINT USING "###"; (INN * 100)) / NNN; : PRINT "  X"
    REM *******************************************************************
380 GOSUB 4900:  REM GOSUB (CSTIFS(NN))
390 GOSUB 6000:  REM GOSUB (CSOLVE(NN))
400 GOSUB 7000:  REM GOSUB (CRSLTP)
410 NEXT NN
420 GOSUB 8000:  REM GOSUB (COUTPP)
440 END

500 REM *******************************************************************
510 REM                              SUBROUTINE CBIPTS
520 REM           THIS SUBROUTINE READS AND CALCULATES BEAM PROPERTIES
530 REM *******************************************************************
540 DIM SCTP$(5)
550 SCTP$(1) = "RECTANGULAR"
560 SCTP$(2) = "TEE SECTION"
570 SCTP$(3) = "III SECTION"
580 SCTP$(4) = "HOLLOW CORE"
590 SCTP$(5) = "BOX SECTION"
     INPUT #1, FILE$
     INPUT #1, pros
     INPUT #1, nops
     INPUT #1, UNIT$(1)
     INPUT #1, UNIT$(2)
     INPUT #1, n
     INPUT #1, NBT
     INPUT #1, SPAN
    FOR I = 1 TO n
     INPUT #1, ibdn(I)
    NEXT I
    FOR I = 1 TO NBT
    FOR J = 1 TO 8
     INPUT #1, P#(I, J)
    NEXT J
    FOR K = 1 TO 2
     INPUT #1, BTYP$(I, K)
    NEXT K
    NEXT I
    FILE1$ = DAS + ":\MULTDATA\" + FILE$ + ".PRN"
    OPEN "O", #2, FILE1$
770 NEQ = 4 * n
780 REM  CHECK IF THE NO. OF BEAMS OR BEAM TYPES EXCEEDS THE DIMENSION STORAGE
790 IF NBT - 10 <= 0 THEN GOTO 830
800 IF NBT - 10 > 0 THEN GOTO 810
810 PRINT "THE NO. OF BEAM TYPES EXCEEDS THE DIMENSION STORAGE(10) ANALYSIS IS THEREFORE TERMINATED"
820 GOTO 1960
830 IF n - 30 <= 0 THEN GOTO 870
840 IF n - 30 > 0 THEN GOTO 850
850 PRINT "THE NO. OF BEAMS EXCEEDS THE DIMENSION STORAGE(30) ANALYSIS IS THEREFORE TERMINATED"
860 GOTO 1960
870 REM*****PRINT OUT THE DATA**********************
    CLS
    PRINT #2, n
    PRINT #2, NBT
    PRINT #2, SPAN
    PRINT #2, UNIT$(1)
    FOR I = 1 TO n
    PRINT #2, ibdn(I)
    NEXT I
1100 REM*****PRINT OUT THE DATA**********************
1110 FOR I = 1 TO NBT
1120 G#(I) = .5 * P#(I, 1) / (1 + P#(I, 2))
1130 FOR K = 1 TO 5
     IF (BTYP$(I, 1) = SCTP$(K)) THEN GOTO 1160
1140 GOTO 1170
1160 IF K = 1 THEN GOTO 1220
     IF K = 2 THEN GOTO 1310
     IF K = 3 THEN GOTO 1310
     IF K = 4 THEN GOTO 1640
     IF K = 5 THEN GOTO 1640
1170 NEXT K
1180 FOR J = 1 TO 2
1190 PRINT BTYP$(I, J)
     END
1200 NEXT J
1210 GOTO 1960
1220 SA#(I) = P#(I, 3) * P#(I, 4)
1230 YBMI#(I) = P#(I, 4) * P#(I, 4) * SA#(I) / 12
1240 ZBMI#(I) = P#(I, 3) * P#(I, 3) * SA#(I) / 12
1250 IF P#(I, 3) - P#(I, 4) < 0 THEN GOTO 1301
1260 IF P#(I, 3) - P#(I, 4) >= 0 THEN GOTO 1270
1270 ZA# = P#(I, 3) / P#(I, 4)
1280 GOSUB 2000: REM CCOEFG(ZA,FA)
1290 TBTJ#(I) = YBMI#(I) * 12 * FA#
1300 GOTO 1960
1301 ZA# = P#(I, 4) / P#(I, 3)
1302 GOSUB 2000: REM CCOEFG(ZA,FA)
1303 TBTJ#(I) = ZBMI#(I) * 12 * FA#
1304 GOTO 1960
1310 TM = 0
1320 SA#(I) = 0
1330 FOR J = 3 TO 5
```

```
1340 AA# = PS(I, 7) * PS(I, J + 3)
     IF J - 4 = 0 THEN GOTO 1380
1350 IF J - 4 < 0 OR J - 4 > 0 THEN GOTO 1370
1370 TM = -TM - AA# * (PS(I, 7) + PS(I, J + 3)) * .5
1380 SA#(I) = SA#(I) + AA#
1390 NEXT J
1400 ALFA#(I) = TM / SA#(I)
1410 YBMI#(I) = 0
1420 ZBMI#(I) = 0
1430 TBTJ#(I) = 0
1440 FOR J = 3 TO 5
     IF J - 4 = 0 THEN GOTO 1540
1450 IF J - 4 < 0 OR J - 4 > 0 THEN GOTO 1470
     IF PS(I, J + 3) = 0 THEN GOTO 1620
1470 IF PS(I, J + 3) < 0 OR PS(I, J + 3) > 0 THEN GOTO 1490
1490 ALFA# = -ALFA#
1500 BMI# = PS(I, J) * PS(I, J + 3)
1505 BMI# = BMI# * (PS(I, J + 3) * PS(I, J + 3) / 12 + (.5 * (PS(I, 7) + PS(I, J + 3)) + ALFA#) ^ 2)
1510 ZA# = PS(I, J) / PS(I, J + 3)
1520 GOSUB 2000
1525 BTJ = PS(I, J + 3) ^ 3 * PS(I, J) * FA#
1530 GOTO 1580
1540 BMI# = PS(I, J) * PS(I, J + 3) * (PS(I, J + 3) * PS(I, J + 3) / 12 + ALFA# * ALFA#)
1550 ZA# = PS(I, J + 3) / PS(I, J)
1560 GOSUB 2000
1570 BTJ = PS(I, J) ^ 3 * PS(I, J + 3) * FA#
1580 YBMI#(I) = YBMI#(I) + BMI#
1590 BMI# = PS(I, J) ^ 3 * PS(I, J + 3) / 12
1600 ZBMI#(I) = ZBMI#(I) + BMI#
1610 TBTJ#(I) = TBTJ#(I) + BTJ
1620 NEXT J
1630 GOTO 1940
1640 IF K - 4 < 0 THEN GOTO 1970
1650 IF K - 4 = 0 THEN GOTO 1670
1660 IF K - 4 > 0 THEN GOTO 1770
1670 IF (PS(I, 3) - PS(I, 5)) < 0 THEN GOTO 1730
1680 IF (PS(I, 3) - PS(I, 5)) >= 0 THEN GOTO 1690
1690 ZA# = PS(I, 3) / PS(I, 5)
1700 GOSUB 2000
1710 TBTJ#(I) = (PS(I, 5) ^ 3) * PS(I, 3) * FA#
1720 GOTO 1800
1730 ZA# = PS(I, 5) / PS(I, 3)
1740 GOSUB 2000
1750 TBTJ#(I) = (PS(I, 3) ^ 3) * PS(I, 5) * FA#
1760 GOTO 1800
1770 T = PS(I, 3) / PS(I, 7) + PS(I, 4)
1780 Q = PS(I, 3) + PS(I, 6)
1790 TBTJ#(I) = PS(I, 7) * T * T * Q * Q
1795 TBTJ#(I) = TBTJ#(I) / (2 * (T / (PS(I, 5) - PS(I, 6)) + Q / (PS(I, 3) / PS(I, 7) - PS(I, 4))))
1800 YBMI#(I) = (PS(I, 5) ^ 3 * PS(I, 3) - PS(I, 6) ^ 3 * PS(I, 4) * PS(I, 7)) / 12
1810 T = ((PS(I, 3) ^ 3) * PS(I, 5) - (PS(I, 4) ^ 3 * PS(I, 6) * PS(I, 7))) / 12
1820 MM = .5 * PS(I, 7)
1830 Q = PS(I, 3) * .5 / PS(I, 7)
1840 ZA# = 0
1850 FA# = 1
     IF MM = 0 THEN GOTO 1920
1860 IF MM < 0 OR MM > 0 THEN GOTO 1880
1880 FOR J = 1 TO MM
1890 ZA# = ZA# + ((PS(I, 3) * .5 - FA# * Q) * (PS(I, 3) * .5 - FA# * Q)) * 2
1900 FA# = FA# + 2
1910 NEXT J
1920 ZBMI#(I) = T - PS(I, 4) * PS(I, 6) * ZA#
1930 SA#(I) = PS(I, 3) * PS(I, 5) - PS(I, 4) * PS(I, 6) * PS(I, 7)
1940 NEXT I
1950 GOTO 1970
1960 KK = I
1970 RETURN

2000 REM***********************************************************************
2010 REM                         SUBROUTINE CCOEFF
2020 REM THIS SUBROUTINE SELECTS THE TORSIONAL COEFFICIENTS FOR THE BEAMS
2030 REM***********************************************************************
2110 T(1) = 0!
     T(2) = 1!
     T(3) = 1.1
     T(4) = 1.2
     T(5) = 1.3
     T(6) = 1.4
     T(7) = 1.5
     T(8) = 1.6
     T(9) = 1.8
     T(10) = 2!
     T(11) = 2.5
     T(12) = 3!
     T(13) = 4!
     T(14) = 5!
     T(15) = 6!
     T(16) = 8!
     T(17) = 10!
     T(18) = 100!
2120 R(1) = 0!
     R(2) = .141
     R(3) = .153
     R(4) = .166
     R(5) = .176
     R(6) = .186
     R(7) = .196
     R(8) = .203
     R(9) = .216
     R(10) = .228
     R(11) = .249
     R(12) = .263
     R(13) = .281
     R(14) = .291
     R(15) = .299
     R(16) = .307
     R(17) = .313
     R(18) = .333
2130 FOR J = 1 TO 17
2140 QQ = ZA# - T(J)
2150 IF QQ < 0 THEN GOTO 2200
2160 IF QQ > 0 THEN GOTO 2170
2165 IF QQ = 0 THEN GOTO 2240
2170 GOTO 2250
2180 FA# = .333
2190 GOTO 2250
2200 TZ = T(J) - T(J - 1)
2210 TF = R(J) - R(J - 1)
2230 FA# = R(J) + QQ * (TF / TZ)
2234 GOTO 2260
2240 FA# = R(J)
2250 NEXT J
2260 RETURN
2270 END
2500 REM***********************************************************************
2510 REM                         SUBROUTINE CHOPTP
2520 REM           THIS SUBROUTINE PRINTS CALCULATED PROPERTIES OF BEAM
2530 REM***********************************************************************
2590 FOR I = 1 TO NBT
     PRINT #2, BTYP$(I, 1)
2610 IF BTYP$(I, 1) = "RECTANGULAR" THEN GOTO 2650
     IF BTYP$(I, 1) = "TEE SECTION" THEN GOTO 2660
```

```
     IF STYP$(I, 1) = "I11 SECTION" THEN GOTO 2680
     IF STYP$(I, 1) = "HOLLOW CORE" THEN GOTO 2740
     IF STYP$(I, 1) = "BOX SECTION" THEN GOTO 2780
2650 PRINT #2, P#(I, 3)
     PRINT #2, P#(I, 4)
     PRINT #2, P#(I, 1)
     PRINT #2, P#(I, 2)
     PRINT #2, SA#(I)
     PRINT #2, YBMI#(I)
     PRINT #2, ZBMI#(I)
     PRINT #2, TBTJ#(I)
     PRINT #2, G#(I)
2660 P#(I, 4) = .5 * P#(I, 4)
2670 GOTO 2810
2680 PRINT #2, P#(I, 3)
     PRINT #2, P#(I, 4)
     PRINT #2, P#(I, 1)
     PRINT #2, P#(I, 2)
     PRINT #2, SA#(I)
     PRINT #2, YBMI#(I)
     PRINT #2, ZBMI#(I)
     PRINT #2, TBTJ#(I)
     PRINT #2, G#(I)
     PRINT #2, P#(I, 6)
2690 IF STYP$(I, 1) = "RECTANGULAR" THEN GOTO 2650
     IF STYP$(I, 1) = "TEE SECTION" THEN GOTO 2700
     IF STYP$(I, 1) = "T11 SECTION" THEN GOTO 2710
2700 PRINT
2705 GOTO 2730
2710 PRINT #2, P#(I, 5)
     PRINT #2, P#(I, 8)
2720 P#(I, 4) = .5 * P#(I, 7) + P#(I, 6) - ABS(ALFA?)
2730 GOTO 2810
2740 MM = P#(I, 7)
2750 PRINT #2, P#(I, 3)
     PRINT #2, P#(I, 4)
     PRINT #2, P#(I, 1)
     PRINT #2, P#(I, 2)
     PRINT #2, SA#(I)
     PRINT #2, YBMI#(I)
     PRINT #2, ZBMI#(I)
     PRINT #2, TBTJ#(I)
     PRINT #2, G#(I)
     PRINT #2, P#(I, 5)
     PRINT #2, P#(I, 6)
     PRINT #2, MM
2760 P#(I, 4) = .5 * P#(I, 5)
2770 GOTO 2810
2780 MM = P#(I, 7)
2790 PRINT #2, P#(I, 3)
     PRINT #2, P#(I, 4)
     PRINT #2, P#(I, 1)
     PRINT #2, P#(I, 2)
     PRINT #2, SA#(I)
     PRINT #2, YBMI#(I)
     PRINT #2, ZBMI#(I)
     PRINT #2, TBTJ#(I)
     PRINT #2, G#(I)
     PRINT #2, P#(I, 5)
     PRINT #2, P#(I, 6)
     PRINT #2, MM
2800 P#(I, 4) = .5 * P#(I, 5)
2810 NEXT I
2820 RETURN
3000 REM*************************************************************************
3010 REM                          SUBROUTINE CSIPT4
```

```
3020 REM            THIS SUBROUTINE READS AND PRINTS SHEAR KEY PROPERTIES
3030 REM*************************************************************************
     INPUT #1, KEY$$
     INPUT #1, NSKT
     FOR I = 1 TO n - 1
     INPUT #1, ISDN(I)
     NEXT I
     FOR I = 1 TO NSKT
     FOR J = 1 TO 8
     INPUT #1, S(I, J)
     NEXT J
     NEXT I
     PRINT #2, KEY$$
3130 PRINT #2, NSKT
3180 FOR I = 1 TO n - 1
3190 PRINT #2, ISDN(I)
3200 NEXT I
3210 IF NSKT - 10 <= 0 THEN GOTO 3250
3220 IF NSKT - 10 > 0 THEN GOTO 3340
3240 GOTO 3620
3250 FOR I = 1 TO NSKT
3260 FOR J = 1 TO 8
3270 PRINT #2, S(I, J)
3280 NEXT J
3290 NEXT I
3300 FOR I = 1 TO n - 1
3310 ij = ISDN(I)
3320 JJ = ibdn(I)
3330 LL = ibdn(I + 1)
3340 BB = .5 * P#(JJ, 3)
3350 CC = P#(JJ, 4) - S(ii, 5)
3360 DD = .5 * P#(LL, 3)
3370 EE = P#(LL, 4) - S(ii, 6)
3380 H#(I, 1) = -BB * S(ii, 1)
3390 H#(I, 2) = CC * S(ii, 1)
3400 H#(I, 3) = -DD * S(ii, 1)
3410 H#(I, 4) = -EE * S(ii, 1)
3420 H#(I, 5) = -BB * H#(I, 1)
3430 H#(I, 6) = CC * H#(I, 1)
3440 H#(I, 7) = CC * S(ii, 2)
3460 H#(I, 8) = -DD * H#(I, 1)
3470 H#(I, 9) = -EE * H#(I, 1)
3480 H#(I, 10) = -EE * S(ii, 2)
3490 H#(I, 11) = CC * H#(I, 3)
3500 H#(I, 12) = BB * S(ii, 3)
3510 H#(I, 13) = CC * H#(I, 3)
3520 H#(I, 14) = CC * H#(I, 4)
3530 H#(I, 15) = DD * S(ii, 3)
3540 H#(I, 16) = CC * CC * S(ii, 2) + BB * BB * S(ii, 3) + S(ii, 4)
3550 H#(I, 17) = -CC * EE * S(ii, 2) + BB * DD * S(ii, 3) - S(ii, 4)
3560 H#(I, 18) = -DD * H#(I, 3)
3570 H#(I, 19) = -DD * H#(I, 4)
3580 H#(I, 20) = -EE * H#(I, 4)
3590 H#(I, 21) = -EE * H#(I, 20) + DD * H#(I, 15) + S(ii, 4)
3600 NEXT I
3610 GOTO 3630
3620 KK = 1
3630 RETURN
3700 REM*************************************************************************
3710 REM                    SUBROUTINE CSIPS(KK,LC)
3720 REM         THIS SUBROUTINE READS AND PRINTS THE LOAD DATA
3730 REM*************************************************************************
3750 TYPE$(1) = "CONCEN"
3760 TYPE$(2) = "UNIFOR"
3770 LC = LC + 1
     INPUT #1, NL
```

```
     INPUT #1, NNM
     INPUT #1, INC
    FOR I = 1 TO NL
     INPUT #1, H(I)
     INPUT #1, V(I)
     INPUT #1, U(I)
     INPUT #1, C(I)
     INPUT #1, E(I)
     INPUT #1, TPLD$(I, 1)
     INPUT #1, LDN(I)
    NEXT I
    FOR I = 1 TO NBT
    FOR J = 1 TO 4
     INPUT #1, yy(I, J)
     INPUT #1, zz(I, J)
    NEXT J
    NEXT I
     INPUT #1, iad
     INPUT #1, np
    FOR I = 1 TO np
     INPUT #1, X(I)
    NEXT I
    CLOSE #1
4070 IF NL - 15 <= 0 THEN GOTO 4110
4080 IF NL - 15 > 0 THEN GOTO 4090
4090 PRINT "THE NO. OF LOADS EXCEEDS THE DIMENSION STORAGE(15) THEREFORE THE ANALYSIS IS TERMINATED"
4100 GOTO 4790
4110 REM PRINT LOAD DATA
    PRINT #2, LC
4140 FOR I = 1 TO 2
4150 PRINT #2, UNITS(I)
4155 NEXT I
    PRINT #2, NL
    PRINT #2, NNM
    PRINT #2, INC
    PRINT #2, iad
4200 FOR J = 1 TO n
4210 FOR I = 1 TO NL
    IF LDN(I) - J = 0 THEN GOTO 4250
4220 IF LDN(I) - J < 0 OR LDN(I) > 0 THEN GOTO 4410
4240 REM *******CHECK TYPE OF LOADS*********************
4250 FOR K = 1 TO 2
    IF TPLD$(I, 1) = TYPE$(K) THEN GOTO 4320
4260 GOTO 4280
4280 NEXT K
4310 GOTO 4350
4320 PRINT #2, LDN(I)
    PRINT #2, H(I)
    PRINT #2, V(I)
    PRINT #2, U(I)
    PRINT #2, C(I)
    PRINT #2, E(I)
    PRINT #2, TPLD$(I, 1)
4410 NEXT I
4420 NEXT J
4430 REM*******INITIALIZATION*************************
4440 FOR I = 1 TO n
4450 FOR K = 1 TO np
4460 FOR J = 1 TO 4
4470 FD#(I, J, K) = 0
4480 FEE#(I, J, K) = 0
4490 IF I - n < 0 THEN GOTO 4510
4500 IF I - n >= 0 THEN GOTO 4520
4510 FEP(I, J, K) = 0
4520 NEXT J
4530 FE#(I, 5, K) = 0
4540 FBB#(I, 6, K) = 0
4550 NEXT K
4570 NEXT I
     IF iad = 0 THEN GOTO 4660
4575 IF iad < 0 OR iad > 0 THEN GOTO 4580
4580 FOR I = 1 TO n - 1
4590 FOR J = 1 TO 4
4600 FOR K = 1 TO np
4610 DL#(I, J, K) = 0
4620 DR#(I, J, K) = 0
4630 NEXT K
4640 NEXT J
4650 NEXT I
4660 ALF = 3.141592654 / SPAN
4670 GOTO 4790
4780 IK = 1
4790 RETURN
4900 REM******************************************************************
4910 REM                     SUBROUTINE CSELFE (NN)
4920 REM       THIS SUBROUTINE FORMS BEAM AND SHEAR KEY STIFFENESSES
4930 REM              AND CREATES STRUCTURE STIFFNESS MATRIX
4940 REM******************************************************************
4945 REM*****INITIALIZATION****************************
4950 ALFA# = ALF * NX
4960 FOR I = 1 TO NEQ
4970 FOR J = 1 TO 7
4980 SK#(I, J) = 0
4990 NEXT J
5000 NEXT I
5010 REM*****BEAM STIFFNESSES*************************
5020 A# = ALFA# * ALFA#
5030 FOR I = 1 TO NST
5040 B#(I, 1) = PE(I, 1) * SAB(I) * A#
5050 B#(I, 2) = PE(I, 1) * A# * ZBM(I) * A#
5060 B#(I, 3) = PE(I, 1) * A# * YBM(I) * A#
5070 B#(I, 4) = GE(I) * TBTJ(I) * A#
5080 NEXT I
5090 REM*****BANDED STRUCTURE STIFFNESS MATRIX********
5100 K = 1
5110 FOR I = 1 TO n - 1
5120 II = IBDN(I)
5130 JJ = IBDN(I)
5140 SK#(K, 1) = SK#(K, 1) + B#(JJ, 1) + S(II, 1)
5250 SK#(K, 2) = SK#(K, 2) + ALFA# * H#(I, 1)
5260 SK#(K, 3) = SK#(K, 3) + ALFA# * H#(I, 2)
5270 SK#(K, 5) = -S(II, 1)
5280 SK#(K, 6) = ALFA# * H#(I, 3)
5290 SK#(K, 7) = ALFA# * H#(I, 4)
5300 K = K + 1
5310 SK#(K, 1) = SK#(K, 1) + B#(JJ, 2) + H#(I, 5) * A# + S(II, 2)
5320 SK#(K, 3) = SK#(K, 3) + H#(I, 6) * A#
5330 SK#(K, 3) = SK#(K, 3) + H#(I, 7)
5340 SK#(K, 4) = -ALFA# * H#(I, 1)
5350 SK#(K, 5) = H#(I, 8) * A# - S(II, 2)
5360 SK#(K, 6) = H#(I, 9) * A#
5370 SK#(K, 7) = H#(I, 10)
5380 K = K + 1
5390 SK#(K, 1) = SK#(K, 1) + B#(JJ, 3) + H#(I, 11) * A# + S(II, 3)
5400 SK#(K, 2) = SK#(K, 2) + H#(I, 12)
5410 SK#(K, 3) = -ALFA# * H#(I, 2)
5420 SK#(K, 4) = H#(I, 13) * A#
5430 SK#(K, 5) = H#(I, 14) * A# - S(II, 3)
5440 SK#(K, 6) = H#(I, 15)
5450 K = K + 1
5460 SK#(K, 1) = SK#(K, 1) + B#(JJ, 4) + H#(I, 16)
5470 SK#(K, 3) = -H#(I, 7)
```

```
5480 SK#(K, 4) = -M#(I, 12)
5490 SK#(K, 5) = M#(I, 17)
5500 K = K + 1
5510 SK#(K, 1) = S(ii, 1)
5520 SK#(K, 2) = -ALFA# * M#(I, 3)
5530 SK#(K, 3) = -ALFA# * M#(I, 4)
5540 K = K + 1
5550 SK#(K, 1) = M#(I, 18) * A# + S(ii, 2)
5560 SK#(K, 2) = M#(I, 19) * A#
5570 SK#(K, 3) = -M#(I, 10)
5580 K = K + 1
5590 SK#(K, 1) = M#(I, 20) * A# + S(ii, 3)
5600 SK#(K, 2) = -M#(I, 15)
5610 K = K + 1
5620 SK#(K, 1) = M#(I, 25)
5630 K = K - 3
5640 NEXT I
5650 JJ = ibdn(I)
5660 FOR J = K TO K + 3
5670 SK#(J, 1) = SK#(J, 1) + B#(JJ, J - K + 1)
5680 NEXT J
5690 AA# = 3.141592654 / XN
5700 FOR I = 1 TO np
5710 A# = AA# * X(I)
5720 ASIN#(I) = SIN(A#)
5730 ACOS#(I) = COS(A#)
5740 NEXT I
5750 RETURN
5760 END
6000 REM****************************************************************************
6010 REM                              SUBROUTINE CSOLVE(XN)
6020 REM           THIS SUBROUTINE ESTABLISHES THE LOAD VECTOR AND SOVES
6030 REM             FOR BEAM DISPLACEMENTS BY GAUSS ELIMINATION METHOD
6040 REM****************************************************************************
6060 TYPE$(1) = "CONCEN"
6070 TYPE$(2) = "UNIFOR"
6080 REM*****INITIALIZATION***************************
6090 FOR I = 1 TO NEQ
6100 RR#(I) = 0
6110 NEXT I
6120 REM*****LOAD VECTOR*******************************
6130 AA# = 3.2732395461 / XN
6140 FOR I = 1 TO NL
6150 IF TPLD$(I, 1) = TYPE$(1) THEN GOTO 6170
6160 GOTO 6190
6170 A# = 1 / U(I)
6180 GOTO 6200
6190 A# = V(I)
6200 A# = A# * AA# * X(I) / SIN(ALFA# * C(I)) * SIN(ALFA# * U(I) * .5)
6210 ii = LDN(I)
6220 K = 4 * ii - 3
6230 RR#(K) = RR#(K) + A#
6240 K = K + 3
6250 RR#(K) = RR#(K) + A# * E(I)
6260 NEXT I
6270 FOR I = 1 TO n
6280 K = 4 * I - 3
6290 FX(I) = RR#(K)
6300 NEXT I
6310 REM****************************************************************************
6320 REM                         SOLVE SIMULTANEOUS EQUATIONS
6330 REM****************************************************************************
6340 REM*****TRIANGULARIZE COEFFICIENT MATRIX(SK)*****
6350 FOR I = 1 TO NEQ
6360 FOR J = 2 TO 7
6370 A# = SK#(I, J) / SK#(I, 1)
6380 K = I + J - 1
6390 IF NEQ - K < 0 THEN GOTO 6450
6400 IF NEQ - K >= 0 THEN GOTO 6410
6410 L = 0
6420 FOR M = J TO 7
6430 L = L + 1
6440 SK#(K, L) = SK#(K, L) - A# * SK#(I, M)
6445 NEXT M
6450 SK#(I, J) = A#
6460 NEXT J
6470 NEXT I
6480 REM*****REDUCT THE LOAD VECTOR*****************
6490 FOR I = 1 TO NEQ
6500 FOR J = 2 TO 7
6510 K = I + J - 1
6520 IF NEQ - K < 0 THEN GOTO 6550
6530 IF NEQ - K >= 0 THEN GOTO 6540
6540 RR#(K) = RR#(K) - SK#(I, J) * RR#(I)
6545 NEXT J
6550 RR#(I) = RR#(I) / SK#(I, 1)
6560 NEXT I
6570 REM*****BACK SUBSTITUTION**********************
6580 I = NEQ
6590 I = I - 1
     IF I = 0 THEN GOTO 6690
6600 IF I < 0 OR I > 0 THEN GOTO 6620
6620 FOR M = 2 TO 7
6630 J = I + M - 1
6640 IF NEQ - J < 0 THEN GOTO 6670
6650 IF NEQ - J >= 0 THEN GOTO 6660
6660 RR#(I) = RR#(I) - SK#(I, M) * RR#(J)
6670 NEXT M
6680 GOTO 6590
6690 RETURN
6700 END

7000 REM****************************************************************************
7010 REM                              SUBROUTINE CRELTS
7020 REM        THIS SUBROUTINE CALULATES THE RESULTS AT SPECIFIED POINTS
7030 REM****************************************************************************
7040 FOR I = 1 TO n - 1
7050 ii = IBDN(I)
7060 JJ = ibdn(I)
7070 LL = ibdn(I + 1)
7080 K = 4 * I - 3
7090 A1 = .5 * P#(JJ, 3)
7100 A2 = .5 * P#(LL, 3)
7110 A3 = P#(JJ, 4) - S(ii, 5)
7120 A4 = P#(LL, 4) - S(ii, 6)
7130 D#(I, 1) = RR#(K) - ALFA# * (A1 * RR#(K + 1) - A3 * RR#(K - 3))
7140 D#(I, 2) = RR#(K + 1) + A3 * RR#(K + 3)
7150 D#(I, 3) = RR#(K + 2) + A1 * RR#(K + 3)
7160 D#(I, 4) = RR#(K - 3)
7170 D#(I, 5) = RR#(K + 4) + ALFA# * (A2 * RR#(K + 5) + A4 * RR#(K + 6))
7180 D#(I, 6) = RR#(K + 5) + A4 * RR#(K + 7)
7190 D#(I, 7) = RR#(K + 6) - A2 * RR#(K + 7)
7200 D#(I, 8) = RR#(K + 7)
7210 NEXT I
7220 FOR I = 1 TO n - 1
7230 ii = IBDN(I)
7240 FOR J = 1 TO 4
7250 SK#(I, J) = D#(I, J) * S(ii, 1) - D#(I, J + 4) * S(ii, 2)
7260 NEXT J
7270 NEXT I
7280 FOR I = 1 TO n
7290 ii = ibdn(I)
```

```
7300 K = 4 * I - 4
7310 FOR J = 1 TO 4
7320 SK#(I, J + 4) = BB#(I, J) * EB#(K + J) / ALFA#
7330 NEXT J
7340 SK#(I, 9) = SK#(I, 6) / ALFA#
7350 SK#(I, 10) = SK#(I, 7) / ALFA#
7360 NEXT I
7370 SK#(1, 6) = -SK#(1, 2)
7380 SK#(1, 7) = -SK#(1, 3)
7390 SK#(n, 6) = SK#(n - 1, 2)
7400 SK#(n, 7) = SK#(n - 1, 3)
7410 IF (n - 2) <= 0 THEN GOTO 7480
7420 IF (n - 2) > 0 THEN GOTO 7430
7430 FOR I = 2 TO n - 1
7440 J = I - 1
7450 SK#(I, 6) = SK#(J, 2) - SK#(I, 2)
7460 SK#(I, 7) = SK#(J, 3) - SK#(I, 3)
7470 NEXT I
7480 FOR I = 1 TO n
7490 SK#(I, 7) = SK#(I, 7) + F#(I)
7500 NEXT I
7510 FOR I = 1 TO n
7520 K = 4 * I - 3
7530 SK#(I, 6) = SK#(I, 6) / ALFA#
7540 SK#(I, 7) = SK#(I, 7) / ALFA#
7550 FOR J = 1 TO np
7560 rrr#(I, 1, J) = rrr#(I, 1, J) + RR#(K) * ACOS#(J)
7570 FB#(I, 1, J) = FB#(I, 1, J) - SK#(I, 5) * ASIN#(J)
7580 FB#(I, 5, J) = FB#(I, 5, J) + SK#(I, 9) * ASIN#(J)
7590 FB#(I, 6, J) = FB#(I, 6, J) + SK#(I, 10) * ASIN#(J)
7600 FOR L = 2 TO 4
7610 M = K + L - 1
7620 rrr#(I, L, J) = rrr#(I, L, J) + RR#(M) * ASIN#(J)
7630 FB#(I, L, J) = FB#(I, L, J) + SK#(I, L + 4) * ACOS#(J)
7640 NEXT L
7650 IF I - n < 0 THEN GOTO 7670
7660 IF I - n >= 0 THEN GOTO 7710
7670 FS#(I, 1, J) = FS#(I, 1, J) + SK#(I, 1) * ACOS#(J)
7680 FOR L = 2 TO 4
7690 FS#(I, L, J) = FS#(I, L, J) + SK#(I, L) * ASIN#(J)
7700 NEXT L
7710 NEXT J
7720 NEXT I
7730 IF ind < 0 OR ind > 0 THEN GOTO 7750
7740 IF ind = 0 THEN GOTO 7850
7750 FOR I = 1 TO n - 1
7760 FOR J = 1 TO np
7770 DL#(I, 1, J) = DL#(I, 1, J) + D#(I, 1) * ACOS#(J)
7780 DR#(I, 1, J) = DR#(I, 1, J) + D#(I, 5) * ACOS#(J)
7785 NEXT J
     FOR L = 2 TO 4
7800 K = L + 4
     FOR J = 1 TO np
7810 DL#(I, L, J) = DL#(I, L, J) + D#(I, L) * ASIN#(J)
7820 DR#(I, L, J) = DR#(I, L, J) + D#(I, K) * ASIN#(J)
     NEXT J
7830 NEXT L
7840 NEXT I
7850 RETURN
7860 END
8000 REM*****************************************************************
8010 REM                         SUBROUTINE COUTPS
8020 REM              THIS SUBROUTINE PRINTS ALL THE RESULTS
8030 REM*****************************************************************
     LOCATE 16, 34: PRINT "FINISHED"
8040 DIM bec#(4, 15, 30)
8050 REM*****BEAM DISPLACEMENTS*************************
     PRINT #2, np
8060 FOR I = 1 TO n STEP 2
8080 FOR K = 1 TO np
8085 PRINT #2, X(K)
8090 FOR J = 1 TO 4
8100 PRINT #2, rrr#(I, J, K)
8110 NEXT J
8120 NEXT K
8130 IF I - n < 0 THEN GOTO 8150
8140 IF I - n >= 0 THEN GOTO 8240
8150 ii = I + 1
8170 FOR K = 1 TO np
8180 PRINT #2, X(K)
8190 FOR J = 1 TO 4
8200 PRINT #2, rrr#(ii, J, K)
8210 NEXT J
8220 NEXT K
8230 NEXT I
8240 REM*****SHEAR KEY DISPLACMENTS*******************
8250 IF ind < 0 OR IDS > 0 THEN GOTO 8270
8260 IF ind = 0 THEN GOTO 8410
8270 FOR I = 1 TO n - 1
8280 FOR K = 1 TO np
8290 PRINT #2, X(K)
8300 FOR J = 1 TO 4
8310 PRINT #2, DL#(I, J, K)
8320 NEXT J
8330 NEXT K
8340 FOR K = 1 TO np
8345 PRINT #2, X(K)
8350 FOR J = 1 TO 4
8360 PRINT #2, DR#(I, J, K)
8370 NEXT J
8380 NEXT K
8390 NEXT I
8400 REM*****BEAM FORCES******************************
8410 FOR I = 1 TO n STEP 2
8430 FOR K = 1 TO np
8440 PRINT #2, X(K)
8450 FOR J = 1 TO 6
8460 PRINT #2, FB#(I, J, K)
8470 NEXT J
8480 NEXT K
8500 IF I - n < 0 THEN GOTO 8520
8510 IF I - n >= 0 THEN GOTO 8600
8520 ii = I + 1
8540 FOR K = 1 TO np
8550 PRINT #2, X(K)
8560 FOR J = 1 TO 6
8570 PRINT #2, FB#(ii, J, K)
8580 NEXT J
8590 NEXT K
8595 NEXT I
8600 REM*****BEAM STRESSES*****************************
8610 FOR I = 1 TO n STEP 2
8630 FOR JJ = 1 TO 2
8640 L = I + JJ - 1
8650 ii = ibm#(L)
8670 FOR K = 1 TO 4
8680 PRINT #2, yy(ii, K)
8690 PRINT #2, zz(ii, K)
8700 NEXT K
8710 FOR J = 1 TO np
8720 A! = FB#(I, 1, J) / AA#(ii)
8730 AA! = FB#(I, 5, J) / ZZMI#(ii)
```

```
8740 AAA! = FBB(I, 6, J) / TBM#(I, J)
8750 FOR K = 1 TO 4
8760 beta(K, J, I) = -A! + AA! * yy(I, K) + AAA! * (zz(I, K) - P(I, 4))
8770 NEXT K
     PRINT #2, X(J)
8780 FOR M = 1 TO 4
8800 PRINT #2, beta(M, J, I)
8810 NEXT M
8820 NEXT J
     IF I - n < 0 THEN GOTO 8830
     IF I - n >= 0 THEN GOTO 8860
8830 NEXT JJ
8840 NEXT I
8850 REM*****SHEAR SET FORCES*****************************
8860 FOR I = 1 TO n - 1 STEP 1
8880 FOR K = 1 TO np
8890 PRINT #2, X(K)
8900 FOR J = 1 TO 4
8910 PRINT #2, FS(I, J, K)
8920 NEXT J
8930 NEXT K
8940 IF I - n + 1 < 0 THEN GOTO 8960
8950 IF I - n + 1 >= 0 THEN GOTO 9040
8960 ii = I + 1
8980 FOR K = 1 TO np
8990 FOR J = 1 TO 4
9000 PRINT #2, FS(ii, J, K)
9010 NEXT J
9020 NEXT K
9030 NEXT I
     CLOSE #2
     OPEN "O", #4, "KASN.DAT"
      PRINT #4, FILE$
      PRINT #4, prm$
      PRINT #4, KEY$$
      PRINT #4, eng$
      CLOSE #4
9040 RETURN
```

```
10   REM****************************************************************************
20   REM                              PLASOLU.BAS
30   REM      THIS PROGRAM ENABLES THE ANALYSIS OF SIMPLY SUPPORTED MULTIBEAM
40   REM                  STRUCTURES WITH PLATE TYPE SHEAR KEYS
100  REM****************************************************************************
     CLS
     'SDYNAMIC
     DIM UNITS$(3), NSET, LeD, ASIN(15), ACOS(15), T(15)
     DIM P(10, 8), SA(10), YBMI(10), ZBMI(10), TRTJ(10), G(10), BTYPE$(10, 2)
     DIM S(10, 8), YY(10, 4), ZZ(10, 4), B(10, 11), A(10, 4)  SKK(10, 8, 8)
     DIM X(18), V(15), U(15), C(15), Z(15), TPLDS(15, 2), LDN(15), Z(15)
     DIM D(29, 6), DL(29, 4, 15), DR(29, 4, 15), FDL(29, 4, 15), FDR(29, 4, 15)
     DIM ISDN(29), EET(30, 8, 8), FS(10, 4, 15)
     DIM SK(120, 30), RR(120), ibdn(30), FB(30, 6, 15), fff(30, 4, 15), F(120)
     OPEN "I", #3, "disk.DAT"
      INPUT #3, Prs
      INPUT #3, DA$
     CLOSE #3
     OPEN "I", #1, "ENON.DAT"
200  LC = 0
210  KK = 1
220  GOSUB 500:   REM GOSUB (CRIPTS(KK))
     IF KK - 1 = 0 THEN GOTO 250
230  IF KK - 1 < 0 OR KK - 1 > 0 THEN END
250  GOSUB 2500:  REM GOSUB (CBOPTS)
260  GOSUB 3000:  REM GOSUB (CSIPTS(KK))
     IF KK - 1 = 0 THEN GOTO 340
270  IF KK - 1 < 0 OR KK - 1 > 0 THEN END
340  GOSUB 3700:  REM GOSUB (CLTPTS(KK,LC))
     IF KK - 1 = 0 THEN GOTO 370
350  IF KK - 1 < 0 OR KK - 1 > 0 THEN END
370  CLS
     LOCATE 5, 31: PRINT "M U L T I B E A M"
     LOCATE 7, 22: PRINT "K H O N K A E N   U N I V E R S I T Y"
     LOCATE 9, 13: PRINT "*********************************************************"
     LOCATE 20, 13: PRINT "********************************************************"
     LOCATE 12, 33: PRINT "PLEASE WAIT"
     LOCATE 14, 20: PRINT "RESULT IS IN THE PROCESS OF CALCULATION"
     FOR NN = 1 TO NNN STEP INC
     REM ***********************************************************************
     LOCATE 16, 35: PRINT USING "###"; (NN * 100)) / NNN; : PRINT " %"
380  GOSUB 4900:   REM GOSUB (CSTIFS(NN))
390  GOSUB 6000:   REM GOSUB (CSOLVE(NN))
400  GOSUB 7000:   REM GOSUB (CRSLTP)
     NEXT NN
430  GOSUB 8000:   REM GOSUB (COUTPP)
     CLS
440  END

500  REM ***********************************************************************
510  REM                          SUBROUTINE CBIPTS
520  REM          THIS SUBROUTINE READS AND CALCULATES BEAM PROPERTIES
530  REM ***********************************************************************
540  DIM SCTPS(5)
550  SCTPS(1) = "RECTANGULAR"
560  SCTPS(2) = "TEE SECTION"
570  SCTPS(3) = "III SECTION"
580  SCTPS(4) = "HOLLOW CORE"
590  SCTPS(5) = "BOX SECTION"
      INPUT #1, FILE$
      INPUT #1, prof
      INPUT #1, eng$
      INPUT #1, UNITS(1)
      INPUT #1, UNITS(2)
```

```
      INPUT #1, n
      INPUT #1, NBT
      INPUT #1, SPAN
     FOR I = 1 TO n
      INPUT #1, ibdn(I)
     NEXT I
     FOR I = 1 TO NBT
     FOR J = 1 TO 8
      INPUT #1, P(I, J)
     NEXT J
     FOR K = 1 TO 2
      INPUT #1, BTYPE(I, K)
     NEXT K
     NEXT I
     FILE1$ = DA$ + "\MULTDATA\" + FILE$ + ".PRN"
     OPEN "O", #2, FILE1$
770  NEQ = 4 * n
780  REM  CHECK IF THE NO. OF BEAMS OR BEAM TYPES EXCEEDS THE DIMENSION STORAGE
790  IF NBT - 10 <= 0 THEN GOTO 830
800  IF NBT - 10 > 0 THEN GOTO 810
810  PRINT "THE NO. OF BEAM TYPES EXCEEDS THE DIMENSION STORAGE(10) ANALYSIS IS THEREFORE TERMINATED"
820  GOTO 1960
830  IF n - 30 <= 0 THEN GOTO 870
840  IF n - 30 > 0 THEN GOTO 850
850  PRINT "THE NO. OF BEAMS EXCEEDS THE DIMENSION STORAGE(30) ANALYSIS IS THEREFORE TERMINATED"
860  GOTO 1960
870  REM*****PRINT OUT THE DATA*************************
     PRINT #2, n
     PRINT #2, NBT
     PRINT #2, SPAN
     PRINT #2, UNITS(2)
1060 FOR I = 1 TO n
     PRINT #2, ibdn(I)
1080 NEXT I
1100 REM*****PRINT OUT THE DATA*************************
1110 FOR I = 1 TO NBT
1120 G(I) = .5 * P(I, 1) / (1 + P(I, 2))
1130 FOR K = 1 TO 5
     IF (BTYPE(I, 1) = SCTPS(K)) THEN GOTO 1160
1140 GOTO 1170
1160 ON K GOTO 1220, 1310, 1310, 1640, 1640
1170 NEXT K
1180 FOR J = 1 TO 2
1190 PRINT BTYPE(I, J)
     END
1200 NEXT J
1210 GOTO 1960
1220 SA(I) = P(I, 3) * P(I, 4)
1230 YBMI(I) = P(I, 4) * P(I, 4) * SA(I) / 12
1240 ZBMI(I) = P(I, 3) * P(I, 3) * SA(I) / 12
1250 IF P(I, 3) - P(I, 4) < 0 THEN GOTO 1301
1260 IF P(I, 3) - P(I, 4) >= 0 THEN GOTO 1270
1270 ZA = P(I, 3) / P(I, 4)
1280 GOSUB 2000:  REM CCOEFS(ZA,FA)
1290 TRTJ(I) = YBMI(I) * 12 * FA
1300 GOTO 1940
1301 ZA = P(I, 4) / P(I, 3)
1302 GOSUB 2000:  REM CCOEFS(ZA,FA)
1303 TRTJ(I) = ZBMI(I) * 12 * FA
1304 GOTO 1940
1310 TM = 0
1320 SA(I) = 0
1330 FOR J = 3 TO 5
1340 AA = P(I, J) * P(I, J + 3)
     IF J - 4 = 0 THEN GOTO 1380
```

```
1350 IF J - 4 < 0 OR J - 4 > 0 THEN GOTO 1370
1370 TM = -TM - AX * (P(I, 7) + P(I, J + 3)) * .5
1380 EA(I) = EA(I) + AX
1390 NEXT J
1400 ALFA(I) = TM / EA(I)
1410 TBMI(I) = 0
1420 ZBMI(I) = 0
1430 TBTJ(I) = 0
1440 FOR J = 3 TO 5
     IF J - 4 = 0 THEN GOTO 1540
1450 IF J - 4 < 0 OR J - 4 > 0 THEN GOTO 1470
     IF P(I, J + 3) = 0 THEN GOTO 1620
1470 IF P(I, J + 3) < 0 OR P(I, J + 3) = 0 THEN GOTO 1490
1490 ALFA = -ALFA
1500 BMI = P(I, 3) * P(I, J + 3)
1501 BMI = BMI * (P(I, J + 3) * P(I, J + 3) / 12 + (.5 * (P(I, 7) + P(I, J + 3)) + ALFA) ^ 2)
1510 ZA = P(I, 3) / P(I, J + 3)
1520 GOSUB 2000
1525 BTJ = P(I, J + 3) ^ 3 * P(I, 3) * FA
1530 GOTO 1580
1540 BMI = P(I, 3) * P(I, J + 3) * (P(I, J + 3) * P(I, J + 3) / 12 + ALFA * ALFA)
1550 ZA = P(I, J + 3) / P(I, 3)
1560 GOSUB 2000
1570 BTJ = P(I, 3) ^ 3 * P(I, J + 3) * FA
1580 TBMI(I) = TBMI(I) + BMI
1590 BMI = P(I, 3) ^ 3 * P(I, J + 3) / 12
1600 ZBMI(I) = ZBMI(I) + BMI
1610 TBTJ(I) = TBTJ(I) + BTJ
1620 NEXT J
1630 GOTO 1940
1640 IF I - 4 < 0 THEN GOTO 1930
1650 IF I - 4 = 0 THEN GOTO 1670
1660 IF I - 4 > 0 THEN GOTO 1730
1670 IF (P(I, 3) - P(I, 5)) < 0 THEN GOTO 1730
1680 IF (P(I, 3) - P(I, 5)) >= 0 THEN GOTO 1690
1690 ZA = P(I, 3) / P(I, 5)
1700 GOSUB 2000
1710 TBTJ(I) = (P(I, 5) ^ 3) * P(I, 3) * FA
1720 GOTO 1800
1730 ZA = P(I, 5) / P(I, 3)
1740 GOSUB 2000
1750 TBTJ(I) = (P(I, 3) ^ 3) * P(I, 5) * FA
1760 GOTO 1800
1770 T = P(I, 3) / P(I, 7) * P(I, 4)
1780 Q = P(I, 3) * P(I, 6)
1790 TBTJ(I) = P(I, 7) * T * T * Q * Q
1791 TBTJ(I) = TBTJ(I) / (4 * (T / (P(I, 5) - P(I, 6)) + Q / (P(I, 3) / P(I, 7) - P(I, 4))))
1800 TBMI(I) = (P(I, 3) ^ 3 * P(I, 3) - P(I, 6) ^ 3 * P(I, 4) * P(I, 7)) / 12
1810 T = ((P(I, 3) ^ 3) * P(I, 5) - (P(I, 4) ^ 3 * P(I, 6) * P(I, 7))) / 12
1820 MM = .5 * P(I, 7)
1830 Q = P(I, 3) * .5 / P(I, 7)
1840 ZA = 0
1850 FA = 1
     IF MM = 0 THEN GOTO 1930
1860 IF MM < 0 OR MM > 0 THEN GOTO 1880
1880 FOR J = 1 TO MM
1890 ZA = ZA + ((P(I, 3) * .5 - FA * Q) * (P(I, 3) * .5 - FA * Q)) * 2
1900 FA = FA + 2
1910 NEXT J
1920 ZBMI(I) = T - P(I, 4) * P(I, 6) * ZA
1930 ZA(I) = P(I, 3) * P(I, 5) - P(I, 4) * P(I, 6) * P(I, 7)
1940 NEXT I
1950 GOTO 1970
1960 KI = 2
1970 RETURN
2000 REM*****************************************************************
```

```
2010 REM                          SUBROUTINE COEFF
2020 REM      THIS SUBROUTINE SELECTS THE TORSIONAL COEFFICIENTS FOR THE BEAMS
2030 REM*****************************************************************
     T(1) = 0!
     T(2) = 1!
     T(3) = 1.1
     T(4) = 1.2
     T(5) = 1.3
     T(6) = 1.4
     T(7) = 1.5
     T(8) = 1.6
     T(9) = 1.8
     T(10) = 2!
     T(11) = 2.5
     T(12) = 3!
     T(13) = 4!
     T(14) = 5!
     T(15) = 6!
     T(16) = 8!
     T(17) = 10!
     T(18) = 100!
     X(1) = 0!
     X(2) = .14
     X(3) = .153
     X(4) = .166
     X(5) = .176
     X(6) = .186
     X(7) = .196
     X(8) = .203
     X(9) = .216
     X(10) = .229
     X(11) = .249
     X(12) = .263
     X(13) = .281
     X(14) = .291
     X(15) = .299
     X(16) = .307
     X(17) = .313
     X(18) = .333
2130 FOR J = 1 TO 17
2140 QQ = ZA - T(J)
2150 IF QQ < 0 THEN GOTO 2200
2160 IF QQ > 0 THEN GOTO 2170
2165 IF QQ = 0 THEN GOTO 2240
2170 GOTO 2250
2180 FA = .333
2190 GOTO 2230
2200 TZ = T(J) - T(J - 1)
2210 TF = X(J) - X(J - 1)
2220 FA = X(J) + QQ * (TF / TZ)
2230 GOTO 2260
2240 FA = X(J)
2250 NEXT J
2260 RETURN
2270 END
2500 REM*****************************************************************
2510 REM                          SUBROUTINE CROPTP
2520 REM          THIS SUBROUTINE PRINTS CALCULATED PROPERTIES OF BEAM
2530 REM*****************************************************************
2590 FOR I = 1 TO NBT
     PRINT #2, BTYP$(I, 1)
2610 IF BTYP$(I, 1) = "RECTANGULAR" THEN GOTO 2630
     IF BTYP$(I, 1) = "TEE SECTION" THEN GOTO 2680
     IF BTYP$(I, 1) = "III SECTION" THEN GOTO 2658
     IF BTYP$(I, 1) = "HOLLOW CORE" THEN GOTO 2748
```

```
     IF BTYP$(I, 1) = "BOX SECTION" THEN GOTO 2780
2650 PRINT #2, P(I, 3)
     PRINT #2, P(I, 4)
     PRINT #2, P(I, 1)
     PRINT #2, P(I, 2)
     PRINT #2, EA(I)
     PRINT #2, YBMI(I)
     PRINT #2, ZBMI(I)
     PRINT #2, TRTJ(I)
     PRINT #2, G(I)
2660 P(I, 4) = .5 * P(I, 4)
2670 GOTO 2810
2680 PRINT #2, P(I, 3)
     PRINT #2, P(I, 4)
     PRINT #2, P(I, 1)
     PRINT #2, P(I, 2)
     PRINT #2, EA(I)
     PRINT #2, YBMI(I)
     PRINT #2, ZBMI(I)
     PRINT #2, TRTJ(I)
     PRINT #2, G(I)
     PRINT #2, P(I, 6)
2690 IF BTYP$(I, 1) = "RECTANGULAR" THEN GOTO 2650
     IF BTYP$(I, 1) = "TEE SECTION" THEN GOTO 2780
     IF BTYP$(I, 1) = "I11 SECTION" THEN GOTO 2710
2700 PRINT
2705 GOTO 2730
2710 PRINT #2, P(I, 5)
     PRINT #2, P(I, 8)
2720 P(I, 4) = .5 * P(I, 7) + P(I, 6) - ABS(ALFA!)
2730 GOTO 2810
2740 MM = P(I, 7)
2750 PRINT #2, P(I, 3)
     PRINT #2, P(I, 4)
     PRINT #2, P(I, 1)
     PRINT #2, P(I, 2)
     PRINT #2, EA(I)
     PRINT #2, YBMI(I)
     PRINT #2, ZBMI(I)
     PRINT #2, TRTJ(I)
     PRINT #2, G(I)
     PRINT #2, P(I, 5)
     PRINT #2, P(I, 6)
     PRINT #2, MM
2760 P(I, 4) = .5 * P(I, 5)
2770 GOTO 2810
2780 MM = P(I, 5)
2790 PRINT #2, P(I, 3)
     PRINT #2, P(I, 4)
     PRINT #2, P(I, 1)
     PRINT #2, P(I, 2)
     PRINT #2, EA(I)
     PRINT #2, YBMI(I)
     PRINT #2, ZBMI(I)
     PRINT #2, TRTJ(I)
     PRINT #2, G(I)
     PRINT #2, P(I, 5)
     PRINT #2, P(I, 6)
     PRINT #2, MM
2800 P(I, 4) = .5 * P(I, 5)
2810 NEXT I
2830 RETURN
3000 REM*********************************************************************
3010 REM                    SUBROUTINE CSKPTS
3020 REM          THIS SUBROUTINE READS SHEAR KEY PROPERTIES
3030 REM*********************************************************************
      INPUT #1, KEY$$
      INPUT #1, NSKT
     FOR I = 1 TO n - 1
      INPUT #1, ISDN(I)
     NEXT I
     FOR I = 1 TO NSKT
     FOR J = 1 TO 8
      INPUT #1, S(I, J)
     NEXT J
     NEXT I
     PRINT #2, KEY$$
     PRINT #2, NSKT
     FOR I = 1 TO n - 1
     PRINT #2, ISDN(I)
3200 NEXT I
3210 IF NSKT - 10 <= 0 THEN GOTO 3250
3220 IF NSKT - 10 > 0 THEN GOTO 3240
3240 GOTO 3620
3250 FOR I = 1 TO NSKT
     FOR J = 1 TO 8
     PRINT #2, S(I, J)
3280 NEXT J
3290 NEXT I
3300 FOR I = 1 TO NSKT
3310 WD = SQR(S(I, 3) * S(I, 3) + S(I, 4) * S(I, 4))
3320 BETA = 6 / 5 * ((S(I, 2) / WD) * (S(I, 2) / WD)) * (1 + S(I, 7))
3380 H(I, 1) = S(I, 1) * S(I, 2) / 4
3390 H(I, 2) = H(I, 1) * 3 / WD
3400 H(I, 3) = H(I, 1) * 4 / 3 * WD
3410 H(I, 4) = H(I, 3) / 2
3420 H(I, 5) = H(I, 1) * WD / 2
3430 H(I, 6) = H(I, 3) * 2
3440 H(I, 7) = S(I, 1) / (1 + 2 * BETA) * S(I, 2) ^ 3 / WD
3460 H(I, 8) = H(I, 7) / (WD * WD)
3470 H(I, 9) = H(I, 7) / 2 / WD
3480 H(I, 10) = H(I, 7) * (2 + BETA) / 6
3490 H(I, 11) = H(I, 7) * (1 - BETA) / 6
3600 NEXT I
3610 GOTO 3630
3620 KK = 2
3630 RETURN

3700 REM*********************************************************************
3710 REM                    SUBROUTINE CLIPS(KK,LC)
3720 REM          THIS SUBROUTINE READS THE LOAD DATA
3730 REM*********************************************************************
3750 TYPE$(1) = "CONCEN"
3760 TYPE$(2) = "UNIFOR"
3770 LC = LC + 1
      INPUT #1, NL
      INPUT #1, NDN
      INPUT #1, ENC
     FOR I = 1 TO NL
      INPUT #1, X(I)
      INPUT #1, Y(I)
      INPUT #1, U(I)
      INPUT #1, C(I)
      INPUT #1, A(I)
      INPUT #1, TPLD$(1, I)
      INPUT #1, LDN(I)
     NEXT I
     FOR I = 1 TO NBT
     FOR J = 1 TO 4
      INPUT #1, YY(I, J)
```

```
      INPUT #1, ss(I, J)
     NEXT J
     NEXT I
      INPUT #1, iad
      INPUT #1, np
     FOR I = 1 TO np
      INPUT #1, X(I)
     NEXT I
     CLOSE #1
4070 IF NL - 15 <= 0 THEN GOTO 4110
4080 IF NL - 15 > 0 THEN GOTO 4090
4090 PRINT "THE NO. OF LOADS EXCEEDS THE DIMENSION STORAGE(15) THEREFORE THE ANALYSIS IS TERMINATED"
4100 GOTO 4780
4110 REM PRINT LOAD DATA
     CLS
     PRINT #2, LC
     FOR I = 1 TO 3
     PRINT #2, UNITS(I)
     NEXT I
     PRINT #2, NL
     PRINT #2, NMX
     PRINT #2, INC
     PRINT #2, iad
4200 FOR J = 1 TO m
4210 FOR I = 1 TO NL
     IF LDN(I) - J = 0 THEN GOTO 4250
4220 IF LDN(I) - J < 0 OR LDN(I) > 0 THEN GOTO 4410
4240 REM *******CHECK TYPE OF LOADS*******************
4250 FOR K = 1 TO 2
     IF TPLDS(I, 1) = TYPES(K) THEN GOTO 4320
4260 GOTO 4280
4280 NEXT K
4310 GOTO 4780
4320 PRINT #2, LDN(I)
     PRINT #2, E(I)
     PRINT #2, F(I)
     PRINT #2, U(I)
     PRINT #2, C(I)
     PRINT #2, X(I)
     PRINT #2, TPLDS(I, 1)
4410 NEXT I
4420 NEXT J
4430 REM********INITIALIZATION**************************
4440 FOR I = 1 TO m
4450 FOR K = 1 TO np
4460 FOR J = 1 TO 4
4470 FB(I, J, K) = 0
4480 FFF(I, J, K) = 0
4490 IF I - m < 0 THEN GOTO 4510
4500 IF I - m >= 0 THEN GOTO 4520
4510 FGL(I, J, K) = 0
     FGR(I, J, K) = 0
4520 NEXT J
4530 FB(I, 5, K) = 0
4540 FB(I, 6, K) = 0
4550 NEXT K
4570 NEXT I
     IF iad = 0 THEN GOTO 4660
4571 IF iad < 0 OR iad > 0 THEN GOTO 4580
4580 FOR I = 1 TO m - 1
4590 FOR J = 1 TO 4
4600 FOR K = 1 TO np
4610 BL(I, J, K) = 0
4620 BR(I, J, K) = 0
4630 NEXT K
4640 NEXT J
4650 NEXT I
4660 ALF = 3.14159265# / SPAN
4670 GOTO 4790
4780 EE = 2
4790 RETURN

4900 REM*************************************************************************
4910 REM                           SUBROUTINE GETSTF (NN)
4920 REM         THIS SUBROUTINE FORMS BEAM AND SHEAR KEY STIFFNESSES
4930 REM                 AND CREATES STRUCTURE STIFFNESS MATRIX
4940 REM*************************************************************************
4945 REM*****SHEAR KEY STIFFNESSES*******************
5000 ALFA = ALF * NN
5010 A = ALFA * ALFA
5020 FOR I = 1 TO NBEY
5030 FOR J = 1 TO 8
5040 FOR K = 1 TO 8
     SKK(I, J, K) = 0
     NEXT K
     NEXT J
5140 SKK(I, 1, 1) = A * H(I, 3) + H(I, 2)
5250 SKK(I, 1, 2) = -ALFA * H(I, 1)
5260 SKK(I, 2, 1) = SKK(I, 1, 2)
5270 SKK(I, 1, 5) = A * H(I, 4) - H(I, 2)
5280 SKK(I, 5, 1) = SKK(I, 1, 5)
5290 SKK(I, 1, 6) = SKK(I, 1, 2)
5310 SKK(I, 6, 1) = SKK(I, 1, 6)
5320 SKK(I, 2, 2) = A * H(I, 5) + H(I, 6)
5330 SKK(I, 2, 5) = -SKK(I, 1, 2)
5340 SKK(I, 5, 2) = SKK(I, 2, 5)
5350 SKK(I, 2, 6) = A * H(I, 5) - H(I, 6)
5360 SKK(I, 6, 2) = SKK(I, 2, 6)
5370 SKK(I, 5, 5) = SKK(I, 1, 1)
5390 SKK(I, 5, 6) = SKK(I, 2, 5)
5400 SKK(I, 6, 5) = SKK(I, 5, 6)
5410 SKK(I, 6, 6) = SKK(I, 2, 2)
5420 SKK(I, 3, 3) = H(I, 8)
5430 SKK(I, 3, 7) = -SKK(I, 3, 3)
5440 SKK(I, 7, 3) = SKK(I, 3, 7)
5460 SKK(I, 7, 7) = SKK(I, 3, 3)
5470 SKK(I, 3, 4) = H(I, 9)
5480 SKK(I, 4, 3) = SKK(I, 3, 4)
5490 SKK(I, 3, 8) = SKK(I, 3, 4)
5510 SKK(I, 8, 3) = SKK(I, 3, 8)
5520 SKK(I, 4, 7) = -SKK(I, 3, 4)
5530 SKK(I, 7, 4) = SKK(I, 4, 7)
5550 SKK(I, 7, 8) = SKK(I, 4, 7)
5560 SKK(I, 8, 7) = SKK(I, 7, 8)
5570 SKK(I, 4, 4) = H(I, 10)
5590 SKK(I, 8, 8) = SKK(I, 4, 4)
5600 SKK(I, 4, 8) = H(I, 11)
5620 SKK(I, 8, 4) = SKK(I, 4, 8)
5630 IF E(I, 4) = 0 THEN GOTO 5815
5640 FOR J = 1 TO 16
5650 FOR K = 1 TO 8
5660 SK(J, K) = 0
     NEXT K
     NEXT J
5670 FOR J = 1 TO 5 STEP 4
     SK(J, J) = 1
5680 SK(J + 1, J + 1) = E(I, 3) / FD
5690 SK(J + 1, J + 2) = -E(I, 4) / FD
5700 SK(J + 2, J + 1) = -SK(J + 1, J + 2)
5710 SK(J + 2, J + 2) = SK(J + 1, J + 1)
```

```
5720 SK(J + 3, J + 3) = 1
5730 NEXT J
5740 FOR J = 9 TO 16
5750 FOR K = 1 TO 8
5760 FOR L = 1 TO 8
5770 SK(J, K) = SK(J, K) + SKE(I, J - 8, L) * SK(L, K)
     NEXT L
     NEXT K
     NEXT J
5780 SK(2, 3) = SK(3, 2)
5790 SK(3, 2) = SK(6, 7)
5800 SK(6, 7) = SK(2, 3)
5810 SK(7, 6) = SK(3, 2)
     FOR J = 1 TO 8
     FOR K = 1 TO 8
     SKE(I, J, K) = 0
     NEXT K
     NEXT J
     FOR J = 1 TO 8
     FOR K = 1 TO 8
     FOR L = 9 TO 16
     SKE(I, J, K) = SKE(I, J, K) + SK(J, L - 8) * SK(L, K)
     NEXT L
     NEXT K
     NEXT J
5815 NEXT I
     REM *******NODAL POINT SHEAR KEY STIFFNESSES******
     FOR I = 1 TO n - 1
     FOR J = 1 TO 8
     FOR K = 1 TO 8
     SK(J, K) = 0
     SK(J + 8, K) = 0
     SKT(I, J, K) = 0
     NEXT K
     NEXT J
     FOR J = 1 TO 8
     SK(J, J) = 1
     NEXT J
     II = IBDN(I)
     JJ = ibdn(I)
     LL = ibdn(I + 1)
     SK(1, 3) = -.5 * P(JJ, 3) * ALFA
     SK(1, 3) = (P(JJ, 4) - E(II, 5)) * ALFA
     SK(2, 4) = P(JJ, 4) - E(II, 5)
     SK(3, 4) = .5 * P(JJ, 3)
     SK(5, 6) = .5 * P(LL, 3) * ALFA
     SK(5, 7) = (P(LL, 4) - E(II, 6)) * ALFA
     SK(6, 8) = P(LL, 4) - E(II, 6)
     SK(7, 8) = -.5 * P(LL, 3)
     FOR J = 9 TO 16
     FOR K = 1 TO 8
     FOR L = 1 TO 8
     SK(J, K) = SK(J, K) + SKE(II, J - 8, L) * SK(L, K)
     NEXT L
     NEXT K
     NEXT J
     FOR J = 2 TO 8
     FOR K = 1 TO J - 1
     SK(J, K) = SK(K, J)
     SK(K, J) = 0
     NEXT K
     NEXT J
     FOR J = 1 TO 8
     FOR K = 1 TO 8
     FOR L = 9 TO 16
     SKT(I, J, K) = SKT(I, J, K) + SK(J, L - 8) * SK(L, K)
     NEXT L
     NEXT K
     NEXT J
     NEXT I
     REM ****** BEAM STIFFNESSES**********************
     FOR I = 1 TO NBT
     B(I, 1) = P(I, 1) * EA(I) * A
     B(I, 2) = P(I, 1) * A * EMI(I) * A
     B(I, 3) = P(I, 1) * A * TMI(I) * A
     B(I, 4) = G(I) * TET(I) * A
     NEXT I
     REM ***ASSEMBLE THE BANDED STRUCTURE STIFFNESS MATRIX***
     FOR I = 1 TO m
     II = ibdn(I)
     FOR L = 1 TO 4
     K = 4 * (I - 1) + L
     SK(K, 1) = B(II, L)
     FOR J = 2 TO 8
     SK(K, J) = 0
     NEXT J
     NEXT L
     NEXT I
     FOR I = 1 TO n - 1
     FOR L = 1 TO 8
     FOR J = 1 TO 9 - L
     K = 4 * (I - 1) + L
     SK(K, J) = SK(K, J) + SKT(I, L, L + J - 1)
     NEXT J
     NEXT L
     NEXT I
     AA = 3.141592654 * NW
     FOR I = 1 TO np
     A = AA * X(I)
     ASIN(I) = SIN(A)
     ACOS(I) = COS(A)
     NEXT I
     RETURN
     END

6000 REM*****************************************************************************
6010 REM                               SUBROUTINE CSOLVE(NM)
6020 REM              THIS SUBROUTINE ESTABLISHES THE LOAD VECTOR AND SOVES
6030 REM               FOR BEAM DISPLACEMENTS BY GAUSS ELIMINATION METHOD
6040 REM*****************************************************************************
6060 TYPE$(1) = "CONCEN"
6070 TYPE$(2) = "UNIFOR"
6080 REM*****INTIALIZATION*****************************
6090 FOR I = 1 TO NEQ
6100 RR(I) = 0
6110 NEXT I
6120 REM*****LOAD VECTOR*******************************
6130 AA = 1.2732395448 / NM
6140 FOR I = 1 TO NL
6150 IF TPLD$(I, 1) = TYPE$(1) THEN GOTO 6170
6160 GOTO 6190
6170 A = 1 / D(I)
6180 GOTO 6200
6190 A = W(I)
6200 A = A * AA * R(I) * SIN(ALPA * C(I)) * SIN(ALFA * U(I) * .5)
6210 II = LBN(I)
6220 K = 4 * II - 3
6230 RR(K) = RR(K) + A
6240 K = K + 1
6250 RR(K) = RR(K) + A * B(I)
```

```
6260 NEXT I
6270 FOR J = 1 TO n
6280 K = 4 * J - 1
6290 F(J) = RR(K)
6300 NEXT J
6310 REM*************************************************************************
6320 REM SOLVE SIMULTANEOUS EQUATIONS
6330 REM*************************************************************************
6340 REM*****TRIANGULARIZE COEFFICIENT MATRIX(SK)*****
6350 FOR I = 1 TO NEQ
6360 FOR J = 2 TO 8
6370 A = SK(I, J) / SK(I, 1)
6380 K = I + J - 1
6390 IF NEQ - K < 0 THEN GOTO 6450
6400 IF NEQ - K >= 0 THEN GOTO 6410
6410 L = 0
6420 FOR m = J TO 8
6430 L = L + 1
6440 SK(K, L) = SK(K, L) - A * SK(I, m)
6445 NEXT m
6450 SK(I, J) = A
6460 NEXT J
6470 NEXT I
6480 REM*****REDUCT THE LOAD VECTOR*****************
6490 FOR I = 1 TO NEQ
6500 FOR J = 2 TO 8
6510 K = I + J - 1
6520 IF NEQ - K < 0 THEN GOTO 6550
6530 IF NEQ - K >= 0 THEN GOTO 6540
6540 RR(K) = RR(K) - SK(I, J) * RR(I)
6545 NEXT J
6550 RR(I) = RR(I) / SK(I, 1)
6560 NEXT I
6570 REM*****BACK SUBSTITUTION*************************
6580 I = NEQ
6590 I = I - 1
     IF I = 0 THEN GOTO 6690
6600 IF I < 0 OR I > 0 THEN GOTO 6620
6620 FOR m = 2 TO 8
6630 J = I + m - 1
6640 IF NEQ - J < 0 THEN GOTO 6670
6650 IF NEQ - J >= 0 THEN GOTO 6660
6660 RR(I) = RR(I) - SK(I, m) * RR(J)
6670 NEXT m
6680 GOTO 6590
6690 RETURN
6700 END

7000 REM*************************************************************************
7010 REM                          SUBROUTINE CHCLTS
7020 REM        THIS SUBROUTINE CALCULATES THE RESULTS AT SPECIFIED POINTS
7030 REM*************************************************************************
7040 FOR I = 1 TO n - 1
7050 ii = IBDN(I)
7060 JJ = ibdn(I)
7070 LL = ibdn(I + 1)
7080 K = 4 * I - 3
7090 A1 = .5 * P(JJ, 3)
7100 A2 = .5 * P(LL, 3)
7110 A3 = P(JJ, 4) - E(ii, 5)
7120 A4 = P(LL, 4) - E(ii, 6)
7130 D(I, 1) = RR(K) - ALFA * (A1 * RR(K + 1) - A3 * RR(K + 2))
7140 D(I, 2) = RR(K + 1) + A3 * RR(K + 3)
7150 D(I, 3) = RR(K + 2) + A1 * RR(K + 3)
7160 D(I, 4) = RR(K + 3)
7170 D(I, 5) = RR(K + 4) + ALFA * (A2 * RR(K + 5) + A4 * RR(K + 6))
7180 D(I, 6) = RR(K + 5) + A4 * RR(K + 7)
7190 D(I, 7) = RR(K + 6) - A2 * RR(K + 7)
7200 D(I, 8) = RR(K + 7)
7210 NEXT I
     FOR I = 1 TO n - 1
     FOR J = 1 TO 8
     SK(I, J) = 0
     NEXT J
     NEXT I
     FOR I = 1 TO n - 1
     ii = IBDN(I)
     FOR J = 1 TO 8
     FOR K = 1 TO 8
     SK(I, J) = SK(I, J) + SKK(ii, J, K) * D(I, K)
     NEXT K
     NEXT J
     NEXT I
     FOR I = 1 TO n
     ii = ibdn(I)
     K = 4 * I - 4
     L = I + n
     FOR J = 1 TO 4
     SK(L, J) = B(ii, J) * RR(K + J) / ALFA
     NEXT J
     SK(L, 5) = SK(L, 2) / ALFA
     SK(L, 6) = SK(L, 3) / ALFA
     NEXT I
     SK(n + 1, 2) = -SK(1, 2)
     SK(n + 1, 3) = -SK(1, 3)
     SK(2 * n, 2) = -SK(n - 1, 6)
     SK(2 * n, 3) = -SK(n - 1, 7)
     IF n - 2 <= 0 THEN GOTO 7220
     FOR I = 2 TO n - 1
     J = I - 1
     SK(I + n, 3) = -SK(J, 7) - SK(I, 3)
     SK(I + n, 2) = -SK(J, 6) - SK(I, 2)
     NEXT I
7220 FOR I = 1 TO n
     J = I + n
     SK(J, 3) = SK(J, 3) + F(I)
     NEXT I
     FOR I = 1 TO n
     K = 4 * I - 3
     m = I + n
     SK(m, 2) = SK(m, 2) / ALFA
     SK(m, 3) = SK(m, 3) / ALFA
     FOR J = 1 TO np
     FFF(I, 1, J) = FFF(I, 1, J) + RR(K) * ACOS(J)
     FB(I, 1, J) = FB(I, 1, J) - SK(m, 2) * ASIN(J)
     FB(I, 5, J) = FB(I, 5, J) + SK(m, 3) * ASIN(J)
     FB(I, 6, J) = FB(I, 6, J) + SK(m, 5) * ASIN(J)
     FOR L = 2 TO 4
     MM = K + L - 1
     FFF(I, L, J) = FFF(I, L, J) + RR(MM) * ASIN(J)
     FB(I, L, J) = FB(I, L, J) + SK(m, L) * ACOS(J)
     NEXT L
     IF I - n >= 0 THEN GOTO 7230
     FSL(I, 1, J) = FSL(I, 1, J) + SK(I, 1) * ACOS(J)
     FSR(I, 1, J) = FSR(I, 1, J) + SK(I, 5) * ACOS(J)
     FOR L = 2 TO 4
     FSL(I, L, J) = FSL(I, L, J) + SK(I, L) * ASIN(J)
     FSR(I, L, J) = FSR(I, L, J) + SK(I, L + 4) * ASIN(J)
     NEXT L
7230 NEXT J
```

```
     NEXT I
7730 IF iad < 0 OR iad > 0 THEN GOTO 7750
7740 IF iad = 0 THEN GOTO 7850
7750 FOR I = 1 TO n - 1
7760 FOR J = 1 TO np
7770 DL(I, 1, J) = DL(I, 1, J) + D(I, 3) * ACOS(J)
7780 DR(I, 1, J) = DR(I, 1, J) + D(I, 3) * ACOS(J)
7785 NEXT J
     FOR I = 2 TO 4
7800 K = I + 4
     FOR J = 1 TO np
7810 DL(I, 1, J) = DL(I, 1, J) + D(I, 1) * ASIN(J)
7820 DR(I, 1, J) = DR(I, 1, J) + D(I, K) * ASIN(J)
     NEXT J
7830 NEXT I
7840 NEXT I
7850 RETURN
7860 END

8000
8030 REM***************************************************************************
     LOCATE 16, 34: PRINT "FINISHED"
8040 DIM bet(4, 15, 30)
8050 REM*****BEAM DISPLACEMENTS************************
     PRINT #2, mp
8060 FOR I = 1 TO n STEP 2
8080 FOR K = 1 TO np
8085 PRINT #2, X(K)
8090 FOR J = 1 TO 6
8100 PRINT #2, rrr(I, J, K)
8110 NEXT J
8120 NEXT K
8130 IF I - n < 0 THEN GOTO 8150
8140 IF I - n >= 0 THEN GOTO 8240
8150 ii = I + 1
8170 FOR K = 1 TO np
8180 PRINT #2, X(K)
8190 FOR J = 1 TO 4
8200 PRINT #2, rrr(ii, J, K)
8210 NEXT J
8220 NEXT K
8230 NEXT I
8240 REM*****SHEAR KEY DISPLACEMENTS******************
8250 IF iad < 0 OR IDS > 0 THEN GOTO 8270
8260 IF iad = 0 THEN GOTO 8410
8270 FOR I = 1 TO n - 1
8280 FOR K = 1 TO np
8290 PRINT #2, X(K)
8300 FOR J = 1 TO 4
8310 PRINT #2, DL(I, J, K)
8320 NEXT J
8330 NEXT K
8340 FOR K = 1 TO np
8345 PRINT #2, X(K)
8350 FOR J = 1 TO 4
8360 PRINT #2, DR(I, J, K)
8370 NEXT J
8380 NEXT K
8390 NEXT I
8400 REM*****BEAM FORCES******************************
8410 FOR I = 1 TO n STEP 2
8420 FOR K = 1 TO np
8440 PRINT #2, X(K)
8450 FOR J = 1 TO 6
8460 PRINT #2, FB(I, J, K)
8470 NEXT J
8480 NEXT K
8500 IF I - n < 0 THEN GOTO 8520
8510 IF I - n >= 0 THEN GOTO 8610
8520 ii = I + 1
8540 FOR K = 1 TO np
8550 PRINT #2, X(K)
8560 FOR J = 1 TO 6
8570 PRINT #2, FB(ii, J, K)
8580 NEXT J
8590 NEXT K
8595 NEXT I
8600 REM*****BEAM STRESSES***************************
8610 FOR I = 1 TO n STEP 2
8630 FOR JJ = 1 TO 2
8640 I = I + JJ - 1
8650 ii = ibmn(I)
8670 FOR K = 1 TO 4
8680 PRINT #2, yy(ii, K)
8690 PRINT #2, zz(ii, K)
8700 NEXT K
8710 FOR J = 1 TO np
8720 A! = FB(I, 1, J) / EA(ii)
8730 AA! = FB(I, 5, J) / ZBMI(ii)
8740 AAA! = FB(I, 6, J) / YBMI(ii)
8750 FOR K = 1 TO 4
8760 bet(K, J, I) = -A! + AA! * yy(ii, K) + AAA! * (zz(ii, K) - P(ii, 4))
8770 NEXT K
     PRINT #2, X(J)
8780 FOR m = 1 TO 4
8800 PRINT #2, bet(m, J, I)
8810 NEXT m
8820 NEXT J
     IF I - n < 0 THEN GOTO 8830
     IF I - n >= 0 THEN GOTO 8860
8830 NEXT JJ
8840 NEXT I
8850 REM*****SHEAR KEY FORCES************************
8860 FOR I = 1 TO n - 1
8880 FOR K = 1 TO np
8890 PRINT #2, X(K)
8900 FOR J = 1 TO 4
8910 PRINT #2, FSL(I, J, K)
8920 NEXT J
8930 NEXT K
8980 FOR K = 1 TO np
8990 FOR J = 1 TO 4
9000 PRINT #2, FSR(I, J, K)
9010 NEXT J
9020 NEXT K
9030 NEXT I
     CLOSE #2
     OPEN "O", #4, "KAEM.DAT"
     PRINT #4, FILE$
     PRINT #4, pro$
     PRINT #4, KEY$$
     PRINT #4, eng$
     CLOSE #4
9040 RETURN
```

```
10   REM*************************************************************************
20   REM                              TRUSOLU.BAS
30   REM      THIS PROGRAM ENABLES THE ANALYSIS OF SIMPLY SUPPORTED MULTIBEAM
40   REM                  STRUCTURES WITH TRUSS TYPE SHEAR KEYS
100  REM*************************************************************************
     CLS
     'DYNAMIC
     DIM TITLE$(16), NEQ(40)
     DIM UNIT$(2), MEKTS, sen, ASIN!(15), ACOS!(15), T!(18)
     DIM P!(10, 8), SA!(10), YBMI!(10), ZBMI!(10), TBTJ!(10), G!(10), BTYP$(10, 2)
     DIM B7!(10, 8), yy!(10, 4), zz!(10, 4), M!(29, 24), B!(10, 4)
     DIM x!(18), Y!(15), U!(15), C!(15), E!(15), TPLDA(15, 2), LDN(15), x!(15)
     DIM D!(29, 8), DL!(29, 4, 15), DR!(29, 4, 15), FS!(29, 4, 15), ISON(29)
     DIM SS!(120, 40), RB!(120), ibdn(30), FB'(30, 6, 15), RRR!(30, 4, 15), F!(120)
     OPEN "I", #3, "disk.DAT"
      INPUT #3, Pr$
      INPUT #3, DA$
     CLOSE
     OPEN "I", #1, "Lbon.DAT"
200  LC = 0
210  KK = 1
220  GOSUB 500:  REM GOSUB (CBIPTS(KK))
     IF KK - 1 = 0 THEN GOTO 250
230  IF KK - 1 < 0 OR KK - 1 > 0 THEN END
250  GOSUB 2500:     REM GOSUB (CBOPTS)
260  GOSUB 3000:     REM GOSUB (CBIPTS(KK))
     IF KK - 1 = 0 THEN GOTO 340
270  IF KK - 1 < 0 OR KK - 1 > 0 THEN END
340  GOSUB 3700:            REM GOSUB (CLIPTS(KK,LC))
     IF KK - 1 = 0 THEN GOTO 370
350  IF KK - 1 < 0 OR KK - 1 > 0 THEN END
370  CLS
     LOCATE 5, 31: PRINT "M U L T I B E A M"
     LOCATE 7, 22: PRINT "K N O N K A E N   U N I V E R S I T Y"
     LOCATE 9, 15: PRINT "*****************************************************"
     LOCATE 20, 15: PRINT "*****************************************************"
     LOCATE 12, 33: PRINT "PLEASE WAIT"
     LOCATE 14, 20: PRINT "RESULT IS IN THE PROCESS OF CALCULATION"
     FOR NN = 1 TO NNN STEP INC
     REM ************************************************************************
     LOCATE 16, 35: PRINT USING "###"; ((NN * 100)) / NNN; : PRINT " %"
     REM ************************************************************************
380  GOSUB 4900:            REM GOSUB (CSTIFS(NN))
390  GOSUB 6000:            REM GOSUB (CSOLVE(NN))
400  GOSUB 7000:            REM GOSUB (CBSLIP)
410  NEXT NN
420  GOSUB 8000:            REM GOSUB (COUTPP)
     CLS
     END

500  REM ************************************************************************
510  REM                                SUBROUTINE CBIPTS
520  REM             THIS SUBROUTINE READS AND CALCULATES BEAM PROPERTIES
530  REM ************************************************************************
540  DIM SCTP$(5)
550  SCTP$(1) = "RECTANGULAR"
560  SCTP$(2) = "TEE SECTION"
570  SCTP$(3) = "LII SECTION"
580  SCTP$(4) = "HOLLOW CORE"
590  SCTP$(5) = "BOX SECTION"
      INPUT #1, FILE$
      INPUT #1, prod
      INPUT #1, engt
      INPUT #1, UNIT$(1)
      INPUT #1, UNIT$(2)
      INPUT #1, N
      INPUT #1, NBT
      INPUT #1, SPAN
     FOR I = 1 TO N
      INPUT #1, ibdn(I)
     NEXT I
     FOR I = 1 TO NBT
     FOR j = 1 TO 8
      INPUT #1, P!(I, j)
     NEXT j
     FOR k = 1 TO 2
      INPUT #1, BTYP$(I, k)
     NEXT k
     NEXT I
     FILE1$ = DA$ + ":\MULTDATA\" + FILE$ + ".PRN"
     OPEN "o", #2, FILE1$
770  NEQ = 4 * N
780  REM  CHECK IF THE NO. OF BEAMS OR BEAM TYPES EXCEEDS THE DIMENSION STORAGE
790  IF NBT - 10 <= 0 THEN GOTO 830
800  IF NBT - 10 > 0 THEN GOTO 810
810  PRINT "THE NO. OF BEAM TYPES EXCEEDS THE DIMENSION STORAGE(10) ANALYSIS IS THEREFORE TERMINATED"
820  GOTO 1960
830  IF N - 30 <= 0 THEN GOTO 870
840  IF N - 30 > 0 THEN GOTO 850
850  PRINT "THE NO. OF BEAMS EXCEEDS THE DIMENSION STORAGE(30) ANALYSIS IS THEREFORE TERMINATED"
860  GOTO 1960
870  REM*****PRINT OUT THE DATA************************
     CLS
880  PRINT #2, N
890  PRINT #2, NBT
900  PRINT #2, SPAN
1010 PRINT #2, UNIT$(1)
1060 FOR I = 1 TO N
1070 PRINT #2, ibdn(I)
1080 NEXT I
1100 REM*****PRINT OUT THE DATA************************
1110 FOR I = 1 TO NBT
1120 G!(I) = .5 * P!(I, 1) / (1 + P!(I, 2))
1130 FOR k = 1 TO 5
     IF (BTYP$(I, 1) = SCTP$(k)) THEN GOTO 1160
1140 GOTO 1170
1160 ON k GOTO 1220, 1310, 1310, 1640, 1640
1170 NEXT k
1180 FOR j = 1 TO 2
1190 PRINT BTYP$(I, j)
     END
1200 NEXT j
1210 GOTO 1960
1220 SA!(I) = P!(I, 3) * P!(I, 4)
1230 YBMI!(I) = P!(I, 4) * P!(I, 4) * SA!(I) / 12
1240 ZBMI!(I) = P!(I, 3) * P!(I, 3) * SA!(I) / 12
1250 IF P!(I, 3) - P!(I, 4) < 0 THEN GOTO 1301
1260 IF P!(I, 3) - P!(I, 4) >= 0 THEN GOTO 1270
1270 ZA = P!(I, 3) / P!(I, 4)
1280 GOSUB 2000:            REM CCOEFS(ZA,FA)
1290 TBTJ!(I) = YBMI!(I) * 12 * fa!
1300 GOTO 1940
1301 ZA = P!(I, 4) / P!(I, 3)
1302 GOSUB 2000:            REM CCOEFS(ZA,FA)
1303 TBTJ!(I) = ZBMI!(I) * 12 * fa!
1304 GOTO 1940
1310 TM = 0
1320 SA!(I) = 0
1330 FOR j = 3 TO 5
```

```
1340 AA = P!(I, J) * P!(I, J + 3)
     IF J - 4 = 8 THEN GOTO 1380
1350 IF J - 4 < 8 OR J - 4 > 8 THEN GOTO 1370
1370 TM = -TM - AA * (P!(I, 7) + P!(I, J + 3)) * .5
1380 SA!(I) = SA!(I) + AA
1390 NEXT J
1400 ALFA!(I) = TM / SA!(I)
1410 YBMI!(I) = 0
1420 ZBMI!(I) = 0
1430 YBTJ!(I) = 0
1440 FOR J = 3 TO 5
     IF J - 4 = 0 THEN GOTO 1540
1450 IF J - 4 < 0 OR J - 4 > 6 THEN GOTO 1470
     IF P!(I, J + 3) = 0 THEN GOTO 1630
1470 IF P!(I, J + 3) < 0 OR P!(I, J + 3) > 0 THEN GOTO 1490
1480 ALFA! = -ALFA!
1500 BMI = P!(8, J) * P!(I, J + 3)
1505 BMI = BMI + (P!(I, J + 3) * P!(I, J + 3) / 12 + 2.5 * (P!(I, 7) + P!(I, J + 3)) * ALFA!) * 3)
1510 ZA = P!(I, 3) / P!(I, J + 3)
1520 GOSUB 2000
1525 BTJ = P!(I, J + 3) ^ 3 * P!(I, J) * fa!
1530 GOTO 1580
1540 BMI = P!(I, J) * P!(I, J + 3) * (P!(I, J + 3) * P!(I, J + 3) / 12 + ALFA! * ALFA!)
1550 ZA = P!(I, J + 3) / P!(8, J)
1560 GOSUB 2000
1570 BTJ = P!(I, J) ^ 3 * P!(I, J + 3) * fa!
1580 YBMI!(I) = YBMI!(I) + BMI
1590 BMI = P!(I, J) ^ 3 * P!(I, J + 3) / 12
1600 ZBMI!(I) = ZBMI!(I) + BMI
1610 YBTJ!(I) = YBTJ!(I) + BTJ
1620 NEXT J
1630 GOTO 1940
1640 IF K - 4 < 0 THEN GOTO 1970
1650 IF K - 4 = 0 THEN GOTO 1670
1660 IF K - 4 > 0 THEN GOTO 1690
1670 IF (P!(I, 3) - P!(I, 5)) < 0 THEN GOTO 1730
1680 IF (P!(I, 3) - P!(I, 5)) >= 0 THEN GOTO 1690
1690 ZA = P!(I, 3) / P!(I, 5)
1700 GOSUB 2000
1710 YBTJ!(I) = (P!(I, 5) ^ 3) * P!(I, 3) * fa!
1720 GOTO 1800
1730 ZA = P!(I, 3) / P!(I, 5)
1740 GOSUB 2000
1750 YBTJ!(I) = (P!(I, 3) ^ 3) * P!(I, 5) * fa!
1760 GOTO 1800
1770 T! = P!(I, 3) / P!(I, 7) * P!(I, 4)
1780 Q = P!(I, 3) * P!(I, 6)
1790 YBTJ!(I) = P!(I, 7) * T! * T! * Q * Q
1795 YBTJ!(I) = YBTJ!(I) / (8 * (T! / (P!(I, 3) - P!(I, 6)) + Q / (P!(I, 3) / P!(I, 7) - P!(I, 4))))
1800 ZBMI!(I) = (P!(I, 5) ^ 3 * P!(I, 3) - P!(I, 6) ^ 3 * P!(I, 4) * P!(I, 7)) / 12
1810 T! = ((P!(I, 3) ^ 3) * P!(I, 5) - (P!(I, 4) ^ 3 * P!(I, 6) * P!(I, 7))) / 12
1820 MM = .5 * P!(I, 7)
1830 Q = P!(I, 3) * .5 / P!(I, 7)
1840 ZA = 0
1850 fa! = 1
     IF MM = 0 THEN GOTO 1930
1860 IF MM < 0 OR MM > 0 THEN GOTO 1880
1880 FOR J = 1 TO MM
1890 ZA = ZA + ((P!(I, 3) * .5 - fa! * Q) * (P!(I, 3) * .5 - fa! * Q)) * 3
1900 fa! = fa! * 3
1910 NEXT J
1920 ZBMI!(I) = T! - P!(I, 4) * P!(I, 6) * ZA
1930 SA!(I) = P!(I, 3) * P!(I, 3) - P!(I, 4) * P!(I, 6) * P!(I, 7)
1940 NEXT I
1950 GOTO 1970
1960 K = 2
1970 RETURN

2000 REM*****************************************************************
2010 REM                          SUBROUTINE COEFF
2020 REM   THIS SUBROUTINE SELECTS THE TORSIONAL COEFFICIENTS FOR THE BEAMS
2030 REM*****************************************************************
     T!(1) = .07
     T!(2) = 1!
     T!(3) = 1.1
     T!(4) = 1.2
     T!(5) = 1.3
     T!(6) = 1.4
     T!(7) = 1.5
     T!(8) = 1.6
     T!(9) = 1.8
     T!(10) = 2!
     T!(11) = 2.5
     T!(12) = 3!
     T!(13) = 4!
     T!(14) = 5!
     T!(15) = 6!
     T!(16) = 8!
     T!(17) = 10!
     T!(18) = 100!
     r!(1) = 0!
     r!(2) = .141
     r!(3) = .153
     r!(4) = .166
     r!(5) = .176
     r!(6) = .186
     r!(7) = .196
     r!(8) = .203
     r!(9) = .236
     r!(10) = .339
     r!(11) = .349
     r!(12) = .363
     r!(13) = .381
     r!(14) = .391
     r!(15) = .399
     r!(16) = .307
     r!(17) = .313
     r!(18) = .333
2130 FOR j = 1 TO 17
2140 QQ = ZA - T!(j)
2150 IF QQ < 0 THEN GOTO 2200
2160 IF QQ > 0 THEN GOTO 2170
2165 IF QQ = 0 THEN GOTO 2240
2170 GOTO 2250
2180 fa! = .333
2190 GOTO 2250
2200 TX = T!(j) - T!(j - 1)
2210 TY = r!(j) - r!(j - 1)
2220 fa! = r!(j) + QQ * (TY / TX)
2230 GOTO 2260
2240 fa! = r!(j)
2250 NEXT j
2260 RETURN
2270 END

2500 REM*****************************************************************
2510 REM                          SUBROUTINE CROPS?
2520 REM        THIS SUBROUTINE PRINTS CALCULATED PROPERTIES OF BEAM'
2530 REM*****************************************************************
2590 FOR I = 1 TO NBT
```

```
      PRINT #1, BTYPE$(I, 1)
2610 IF BTYPE$(I, 1) = "RECTANGULAR" THEN GOTO 2630
      IF BTYPE$(I, 1) = "TEE SECTION" THEN GOTO 2680
      IF BTYPE$(I, 1) = "III SECTION" THEN GOTO 2680
      IF BTYPE$(I, 1) = "HOLLOW CORE" THEN GOTO 2740
      IF BTYPE$(I, 1) = "BOX SECTION" THEN GOTO 2780
2630 PRINT #2, P!(I, 3)
      PRINT #2, P!(I, 4)
      PRINT #2, P!(I, 1)
      PRINT #2, P!(I, 2)
      PRINT #2, GA!(I)
      PRINT #2, YBAR!(I)
      PRINT #2, ZBAR!(I)
      PRINT #2, TETA!(I)
      PRINT #2, G!(I)
2660 P!(I, 4) = .5 * P!(I, 4)
2670 GOTO 2810
2680 PRINT #2, P!(I, 3)
      PRINT #2, P!(I, 4)
      PRINT #2, P!(I, 1)
      PRINT #2, P!(I, 2)
      PRINT #2, GA!(I)
      PRINT #2, YBAR!(I)
      PRINT #2, ZBAR!(I)
      PRINT #2, TETA!(I)
      PRINT #2, G!(I)
      PRINT #2, P!(I, 6)
2690 IF BTYPE$(I, 1) = "RECTANGULAR" THEN GOTO 2650
      IF BTYPE$(I, 1) = "TEE SECTION" THEN GOTO 2700
      IF BTYPE$(I, 1) = "III SECTION" THEN GOTO 2710
2700 PRINT
2705 GOTO 2730
2710 PRINT #2, P!(I, 5)
      PRINT #2, P!(I, 8)
2720 P!(I, 4) = .5 * P!(I, 7) + P!(I, 6) - ABS(ALFA!)
2730 GOTO 2810
2740 MM = P!(I, 7)
2750 PRINT #2, P!(I, 3)
      PRINT #2, P!(I, 4)
      PRINT #2, P!(I, 1)
      PRINT #2, P!(I, 2)
      PRINT #2, GA!(I)
      PRINT #2, YBAR!(I)
      PRINT #2, ZBAR!(I)
      PRINT #2, TETA!(I)
      PRINT #2, G!(I)
      PRINT #2, P!(I, 5)
      PRINT #2, P!(I, 6)
      PRINT #2, MM
2760 P!(I, 4) = .5 * P!(I, 5)
2770 GOTO 2810
2780 MM = P!(I, 7)
2790 PRINT #2, P!(I, 3)
      PRINT #2, P!(I, 4)
      PRINT #2, P!(I, 1)
      PRINT #2, P!(I, 2)
      PRINT #2, GA!(I)
      PRINT #2, YBAR!(I)
      PRINT #2, ZBAR!(I)
      PRINT #2, TETA!(I)
      PRINT #2, G!(I)
      PRINT #2, P!(I, 5)
      PRINT #2, P!(I, 6)
      PRINT #2, MM
2800 P!(I, 4) = .5 * P!(I, 5)
2810 NEXT I
2820 RETURN

3000 REM*****************************************************************************
3010 REM                              SUBROUTINE CSIPTS
3020 REM                   THIS SUBROUTINE READS SHEAR KEY PROPERTIES
3030 REM*****************************************************************************
       INPUT #1, KEYES
       INPUT #1, NKEYS
      FOR I = 1 TO N - 1
       INPUT #1, ISDN(I)
      NEXT I
      FOR I = 1 TO NKEYS
      FOR J = 1 TO 6
       INPUT #1, K!(I, J)
      NEXT J
      NEXT I
      PRINT #2, KEYES
3130 PRINT #2, NKEYS
      FOR I = 1 TO N - 1
      PRINT #2, ISDN(I)
3200 NEXT I
3210 IF NKEYS - 10 <= 0 THEN GOTO 3250
3220 IF NKEYS - 10 > 0 THEN GOTO 3240
3240 GOTO 3630
3250 FOR I = 1 TO NKEYS
      FOR j = 1 TO 6
3270 PRINT #2, K!(I, j)
3280 NEXT j
3290 NEXT I
3300 FOR I = 1 TO N - 1
3310 ii = ISDN(I)
3320 JJ = ibdn(I)
3330 LL = ibdn(I + 1)
      WD = SQR(K!(ii, 3) * K!(ii, 3) + K!(ii, 4) * K!(ii, 4))
3340 BB = .5 * P!(JJ, 3)
3350 CC = P!(JJ, 4) - K!(ii, 5)
3360 DD = .5 * P!(LL, 3)
3370 EE = P!(LL, 4) - K!(ii, 6)
      GG = K!(ii, 2) / (WD ^ 2) * K!(ii, 1)
3380 H!(I, 1) = BB * K!(ii, 7)
3390 H!(I, 2) = CC * K!(ii, 7)
3400 H!(I, 3) = BB * H!(I, 1)
3410 H!(I, 4) = CC * H!(I, 2)
3420 H!(I, 5) = CC * H!(I, 1)
3430 H!(I, 6) = GG * K!(ii, 3) * K!(ii, 3)
3440 H!(I, 7) = GG * K!(ii, 3) * K!(ii, 4)
3450 H!(I, 8) = GG * K!(ii, 4) * K!(ii, 4)
3470 H!(I, 9) = DD * H!(I, 1)
3480 H!(I, 10) = EE * H!(I, 1)
3490 H!(I, 11) = DD * K!(ii, 7)
3500 H!(I, 12) = EE * K!(ii, 7)
3510 H!(I, 13) = DD * H!(I, 11)
3520 H!(I, 14) = EE * H!(I, 12)
3530 H!(I, 15) = EE * H!(I, 11)
3540 H!(I, 16) = CC * H!(I, 11)
3550 H!(I, 17) = CC * H!(I, 12)
3560 H!(I, 18) = CC * H!(I, 6) - BB * H!(I, 7)
3570 H!(I, 19) = -EE * H!(I, 6) - DD * H!(I, 7)
3580 H!(I, 20) = -CC * H!(I, 7) + BB * H!(I, 8)
3590 H!(I, 21) = EE * H!(I, 7) + DD * H!(I, 8)
      H!(I, 22) = CC * H!(I, 19) + BB * H!(I, 20) + K!(ii, 8)
      H!(I, 23) = -EE * H!(I, 18) + DD * H!(I, 20) - K!(ii, 8)
      H!(I, 24) = -EE * H!(I, 19) + DD * H!(I, 21) + K!(ii, 8)
3600 NEXT I
```

```
3610 GOTO 3630
3620 EK = 1
3630 RETURN
3700 REM*******************************************************************
3710 REM                         SUBROUTINE CLIPS(EK,LC)
3720 REM                  THIS SUBROUTINE READS THE LOAD DATA
3730 REM*******************************************************************
3750 TYPE$(1) = "CONCEN"
3760 TYPE$(2) = "UNIFOR"
3770 LC = LC + 1
     INPUT #1, NL
     INPUT #1, NNN
     INPUT #1, INC
    FOR I = 1 TO NL
     INPUT #1, e!(I)
     INPUT #1, V!(I)
     INPUT #1, U!(I)
     INPUT #1, C!(I)
     INPUT #1, Z!(I)
     INPUT #1, TPLD$(I, 1)
     INPUT #1, LDN(I)
    NEXT I
    FOR I = 1 TO NST
    FOR j = 1 TO 4
     INPUT #1, yy!(I, j)
     INPUT #1, zz!(I, j)
    NEXT j
    NEXT I
     INPUT #1, ind
     INPUT #1, np
    FOR I = 1 TO np
     INPUT #1, x!(I)
    NEXT I
    CLOSE #1
4070 IF NL - 15 <= 0 THEN GOTO 4110
4080 IF NL - 15 > 0 THEN GOTO 4090
4090 PRINT "THE NO. OF LOADS EXCEEDS THE DIMENSION STORAGE(15) THEREFORE THE ANALYSIS IS TERMINATED"
4100 GOTO 4780
4110 REM PRINT LOAD DATA
     PRINT #2, LC
4120 PRINT
4140 FOR I = 1 TO 2
4150 PRINT #2, WHIT$(I)
4155 NEXT I
4160 PRINT #2, NL
4170 PRINT #2, NNN
4180 PRINT #2, INC
     PRINT #2, ind
4200 FOR j = 1 TO N
4210 FOR I = 1 TO NL
     IF LDN(I) - j = 0 THEN GOTO 4250
4230 IF LDN(I) - j < 0 OR LDN(I) > 0 THEN GOTO 4410
4240 REM ******CHECK TYPE OF LOADS*****************
4250 FOR k = 1 TO 2
     IF TPLD$(I, 1) = TYPE$(k) THEN GOTO 4320
4260 GOTO 4280
4280 NEXT k
4310 GOTO 4780
4320 PRINT #2, LDN(I)
4330 PRINT #2, e!(I)
4340 PRINT #2, V!(I)
4350 PRINT #2, U!(I)
4360 PRINT #2, C!(I)
4370 PRINT #2, Z!(I)
4390 PRINT #2, TPLD$(I, 1)
4410 NEXT I
4420 NEXT j
4430 REM******INITIALIZATION*************************
4440 FOR I = 1 TO N
4450 FOR k = 1 TO np
4460 FOR j = 1 TO 4
4470 FBR(I, j, k) = 0
4480 FBL!(I, j, k) = 0
4490 IF I - N < 0 THEN GOTO 4510
4500 IF I - N >= 0 THEN GOTO 4530
4510 FBI(I, j, k) = 0
4520 NEXT j
4530 FB!(I, 5, k) = 0
4540 FB!(I, 6, k) = 0
4550 NEXT k
4570 NEXT I
     IF ind = 0 THEN GOTO 4660
4575 IF ind < 0 OR ind > 0 THEN GOTO 4580
4580 FOR I = 1 TO N - 1
4590 FOR j = 1 TO 4
4600 FOR k = 1 TO np
4610 DL!(I, j, k) = 0
4620 DR!(I, j, k) = 0
4630 NEXT k
4640 NEXT j
4650 NEXT I
4660 ALF = 3.141592654 / SPAN
4670 GOTO 4790
4780 EK = 1
4790 RETURN
4900 REM*******************************************************************
4910 REM                           SUBROUTINE CSTIFF (MF)
4920 REM          THIS SUBROUTINE FORMS BEAM AND SHEAR KEY STIFFNESSES
4930 REM                    AND CREATES STRUCTURE STIFFNESS MATRIX
4940 REM*******************************************************************
4945 REM*****INITIALIZATION*************************
4950 ALFA! = ALF * MN
4960 FOR I = 1 TO NEQ
4970 FOR J = 1 TO 7
4980 SK!(I, J) = 0
4990 NEXT J
5000 NEXT I
5010 REM*****BEAM STIFFNESSES***********************
5020 A = ALFA! * ALFA!
5030 FOR I = 1 TO NST
5040 B!(I, 1) = P!(I, 1) * SAI(I) * A
5050 B!(I, 2) = P!(I, 1) * A * ZBAI!(I) * A
5060 B!(I, 3) = P!(I, 1) * A * YBAI!(I) * A
5070 B!(I, 4) = G!(I) * TETJ!(I) * A
5080 NEXT I
5090 REM*****BANDED STRUCTURE STIFFNESS MATRIX********
5100 k = 1
5110 FOR I = 1 TO N - 1
5120 II = ISDN(I)
5130 JJ = iBdn(I)
5140 SK!(k, 1) = SK!(k, 1) + B!(JJ, 1) + S!(II, 7)
5250 SK!(k, 2) = SK!(k, 2) - ALFA! * H!(I, 1)
5260 SK!(k, 3) = SK!(k, 3) + ALFA! * H!(I, 2)
5270 SK!(k, 5) = -H!(I, 7)
5280 SK!(k, 6) = -ALFA! * H!(I, 11)
5290 SK!(k, 7) = -ALFA! * H!(I, 12)
5300 k = k + 1
5310 SK!(k, 1) = SK!(k, 1) + B!(JJ, 2) * A * H!(I, 3) + H!(I, 8)
5320 SK!(k, 2) = SK!(k, 2) - A * H!(I, 5) - H!(I, 1)
5330 SK!(k, 3) = SK!(k, 3) + H!(I, 18)
```

```
5340 SK!(k, 4) = ALFA! * MI(I, 6)
5350 SK!(k, 5) = MI(I, 9) * A - MI(I, 6)
5360 SK!(k, 6) = A * MI(I, 10) + MI(I, 7)
5370 SK!(k, 7) = MI(I, 19)
5380 k = k + 1
5390 SK!(k, 1) = SK!(k, 1) + MI(JJ, 3) + MI(I, 4) * A + MI(I, 8)
5400 SK!(k, 2) = SK!(k, 2) + MI(I, 20)
5410 SK!(k, 3) = -ALFA! * MI(I, 3)
5420 SK!(k, 4) = -A * MI(I, 16) + MI(I, 7)
5430 SK!(k, 5) = -A * MI(I, 17) - MI(I, 8)
5440 SK!(k, 6) = MI(I, 21)
5450 k = k + 1
5460 SK!(k, 1) = SK!(k, 2) + MI(JJ, 4) + MI(I, 22)
5470 SK!(k, 3) = -MI(I, 18)
5480 SK!(k, 4) = -MI(I, 10)
5490 SK!(k, 5) = MI(I, 23)
5500 k = k + 1
5510 SK!(k, 1) = MI(JJ, 3)
5520 SK!(k, 2) = ALFA! * MI(I, 11)
5530 SK!(k, 3) = ALFA! * MI(I, 12)
5540 k = k + 1
5550 SK!(k, 1) = MI(I, 12) * A + MI(I, 6)
5560 SK!(k, 2) = A * MI(I, 13) - MI(I, 7)
5570 SK!(k, 3) = -MI(I, 19)
5580 k = k + 1
5590 SK!(k, 1) = MI(I, 14) * A + MI(I, 8)
5600 SK!(k, 2) = -MI(I, 21)
5610 k = k + 1
5620 SK!(k, 1) = MI(I, 24)
5630 k = k - 3
5640 NEXT I
5650 JJ = ibdm(I)
5660 FOR j = k TO k + 3
5670 SK!(j, 1) = SK!(j, 1) + MI(JJ, j - k + 1)
5680 NEXT j
5690 AA = 3.141592654# * NN
5700 FOR I = 1 TO np
5710 A = AA * X!(I)
5720 ASIN!(I) = SIN(A)
5730 ACOS!(I) = COS(A)
5740 NEXT I
5750 RETURN
5760 END
6000 REM*************************************************************************
6010 REM                              SUBROUTINE CSOLVE(NN)
6020 REM           THIS SUBROUTINE ESTABLISHE THE LOAD VECTOR AND SOVES
6030 REM            FOR BEAM DISPLACEMENTS BY GAUSS ELIMINATION METHOD
6040 REM*************************************************************************
6050 TYPE$(1) = "CONCEN"
6070 TYPE$(2) = "UNIFOR"
6080 REM*****INTIALIZATION*****************************
6090 FOR I = 1 TO NEQ
6100 RR!(I) = 0
6110 NEXT I
6130 REM*****LOAD VECTOR*******************************
6130 AA = 1.732238546# / NN
6140 FOR I = 1 TO NL
6150 IF TPLDS(I, 1) = TYPE$(1) THEN GOTO 6170
6160 GOTO 6190
6170 AI = 1 / UI(I)
6180 GOTO 6200
6190 AI = U!(I)
6200 AS = AI * AA * P!(I) * SIN(ALFA! * C!(I)) * SIN(ALFA! * UI(I) * .5)
6210 ii = LDN(I)
6220 k = 4 * ii - 3
6230 RR!(k) = RR!(k) + AS
6240 k = k + 1
6250 RR!(k) = RR!(k) + AS * E!(I)
6260 NEXT I
6270 FOR I = 1 TO N
6280 k = 4 * I - 3
6290 FI(I) = RR!(k)
6300 NEXT I
6310 REM*************************************************************************
6320 REM                           SOLVE SIMULTANEOUS EQUATIONS
6330 REM*************************************************************************
6340 REM*****TRIANGULARIZE COEFFICIENT MATRIX(SK)*****
6350 FOR I = 1 TO NEQ
6360 FOR j = 2 TO 7
6370 AS = SK!(I, j) / SK!(I, 1)
6380 k = I + j - 1
6390 IF NEQ - k < 0 THEN GOTO 6450
6400 IF NEQ - k >= 0 THEN GOTO 6410
6410 l = 0
6420 FOR m = j TO 7
6430 l = l + 1
6440 SK!(k, l) = SK!(k, l) - AS * SK!(I, m)
6445 NEXT m
6450 SK!(I, j) = AS
6460 NEXT j
6470 NEXT I

6480 REM*****REDUCT THE LOAD VECTOR*********************
6490 FOR I = 1 TO NEQ
6500 FOR j = 2 TO 7
6510 k = I + j - 1
6520 IF NEQ - k < 0 THEN GOTO 6550
6530 IF NEQ - k >= 0 THEN GOTO 6540
6540 RR!(k) = RR!(k) - SK!(I, j) * RR!(I)
6545 NEXT j
6550 RR!(I) = RR!(I) / SK!(I, 1)
6560 NEXT I
6570 REM*****BACK SUBSTITUTION**************************
6580 I = NEQ
6590 I = I - 1
     IF I = 0 THEN GOTO 6690
6600 IF I < 0 OR I = 0 THEN GOTO 6610
6620 FOR m = 2 TO 7
6630 j = I + m - 1
6640 IF NEQ - j < 0 THEN GOTO 6670
6650 IF NEQ - j >= 0 THEN GOTO 6660
6660 RR!(I) = RR!(I) - SK!(I, m) * RR!(j)
6670 NEXT m
6680 GOTO 6590
6690 RETURN
6700 END

7000 REM*************************************************************************
7010 REM                              SUBROUTINE CRELTS
7020 REM          THIS SUBROUTINE CALULATES THE RESULTS AT SPECIFIED POINTS
7030 REM*************************************************************************
7040 FOR I = 1 TO N - 1
7050 II = IBDM(I)
7060 JJ = ibdm(I)
7070 LL = ibdm(I + 1)
7080 k = 4 * I - 3
7090 A1 = .5 * FI(JJ, 3)
7100 A2 = .5 * FI(LL, 3)
7110 A3 = FI(JJ, 4) - FI(II, 5)
7120 A4 = FI(LL, 4) - G!(II, 6)
```

```
7130 DI(I, 1) = RR!(k) - ALFA! * (A1 * RR!(k + 1) - A3 * RR!(k + 3))
7140 DI(I, 2) = RR!(k + 1) * A3 * RR!(k + 3)
7150 DI(I, 3) = RR!(k + 2) + A3 * RR!(k + 3)
7160 DI(I, 4) = RR!(k + 3)
7170 DI(I, 5) = RR!(k + 4) + ALFA! * (A2 * RR!(k + 5) + A4 * RR!(k + 6))
7180 DI(I, 6) = RR!(k + 5) + A4 * RR!(k + 7)
7190 DI(I, 7) = RR!(k + 6) - A2 * RR!(k + 7)
7200 DI(I, 8) = RR!(k + 7)
7210 NEXT I
7220 FOR I = 1 TO N - 1
7230 ii = ISDN(I)
     SK!(I, 1) = DI(I, 1) * EI(ii, 7) - DI(I, 5) * EI(ii, 7)
     SK!(I, 2) = DI(I, 2) * EI(I, 6) - DI(I, 6) * EI(I, 6) - DI(I, 3) * EI(I, 7) + DI(I, 7) * EI(I, 7)
     SK!(I, 3) = DI(I, 3) * EI(I, 8) - DI(I, 7) * EI(I, 8) - DI(I, 2) * EI(I, 7) + DI(I, 6) * EI(I, 7)
     SK!(I, 4) = DI(I, 4) * EI(ii, 8) - DI(I, 8) * EI(ii, 8)
7270 NEXT I
7280 FOR I = 1 TO N
7290 ii = ISDN(I)
7300 k = 4 * I - 4
7310 FOR j = 1 TO 4
7320 SK!(I, j + 4) = EI(ii, j) * RR!(k + j) / ALFA!
7330 NEXT j
7340 SK!(I, 9) = SK!(I, 6) / ALFA!
7350 SK!(I, 10) = SK!(I, 7) / ALFA!
7360 NEXT I
7370 SK!(1, 6) = -SK!(1, 2)
7380 SK!(1, 7) = -SK!(1, 3)
7390 SK!(N, 6) = SK!(N - 1, 2)
7400 SK!(N, 7) = SK!(N - 1, 3)
7410 IF (N - 3) <> 0 THEN GOTO 7480
7420 IF (N - 3) > 0 THEN GOTO 7430
7430 FOR I = 2 TO N - 1
7440 j = I - 1
7450 SK!(I, 6) = SK!(j, 2) - SK!(I, 2)
7460 SK!(I, 7) = SK!(j, 3) - SK!(I, 3)
7470 NEXT I
7480 FOR I = 1 TO N
7490 SK!(I, 7) = SK!(I, 7) + F!(I)
7500 NEXT I
7510 FOR I = 1 TO N
7520 k = 4 * I - 3
7530 SK!(I, 8) = SK!(I, 6) / ALFA!
7540 SK!(I, 7) = SK!(I, 7) / ALFA!
7550 FOR j = 1 TO np
7560 RRR!(I, 1, j) = RRR!(I, 1, j) + RR!(k) * ACOS!(j)
7570 FB!(I, 1, j) = FB!(I, 1, j) - SK!(I, 5) * ASIN!(j)
7580 FB!(I, 5, j) = FB!(I, 5, j) + SK!(I, 9) * ASIN!(j)
7590 FB!(I, 6, j) = FB!(I, 6, j) + SK!(I, 10) * ASIN!(j)
7600 FOR l = 2 TO 4
7610 m = k + l - 1
7620 RRR!(I, l, j) = RRR!(I, l, j) + RR!(m) * ASIN!(j)
7630 FB!(I, l, j) = FB!(I, l, j) + SK!(I, l + 4) * ACOS!(j)
7640 NEXT l
7650 IF I - N < 0 THEN GOTO 7630
7660 IF I - N >= 0 THEN GOTO 7710
7670 FS!(I, 1, j) = FS!(I, 1, j) + SK!(I, 1) * ACOS!(j)
7680 FOR l = 2 TO 4
7690 FS!(I, l, j) = FS!(I, l, j) + SK!(I, l) * ASIN!(j)
7700 NEXT l
7710 NEXT j
7720 NEXT I
7730 IF iad < 0 OR iad > 0 THEN GOTO 7750
7740 IF iad = 0 THEN GOTO 7850
7750 FOR I = 1 TO N - 1
7760 FOR j = 1 TO np
7770 DL!(I, 1, j) = DL!(I, 1, j) + DI(I, 1) * ACOS!(j)
7780 DR!(I, 1, j) = DR!(I, 1, j) + DI(I, 5) * ACOS!(j)
7785 NEXT j
     FOR l = 2 TO 4
7800 k = l + 4
     FOR j = 1 TO np
7810 DL!(I, l, j) = DL!(I, l, j) + DI(I, l) * ASIN!(j)
7820 DR!(I, l, j) = DR!(I, l, j) + DI(I, k) * ASIN!(j)
     NEXT j
7830 NEXT l
7840 NEXT I
7850 RETURN
7860 END

8000 REM**********************************************************************
8010 REM                            SUBROUTINE COUTPE
8020 REM                  THIS SUBROUTINE PRINTS ALL THE RESULTS
8030 REM**********************************************************************
     LOCATE 16, 34: PRINT "FINISHED"
8040 DIM bs!(4, 15, 30)
8050 REM*****BEAM DISPLACEMENTS***********************
     PRINT #2, np
8060 FOR I = 1 TO N STEP 2
8080 FOR k = 1 TO np
8085 PRINT #2, x!(k)
8090 FOR j = 1 TO 4
8100 PRINT #2, RRR!(I, j, k)
8110 NEXT j
8120 NEXT k
8130 IF I - N < 0 THEN GOTO 8150
8140 IF I - N >= 0 THEN GOTO 8240
8150 ii = I + 1
8170 FOR k = 1 TO np
8180 PRINT #2, x!(k)
8190 FOR j = 1 TO 4
8200 PRINT #2, RRR!(ii, j, k)
8210 NEXT j
8220 NEXT k
8230 NEXT I
8240 REM*****SHEAR KEY DISPLACEMENTS*******************
8250 IF iad < 0 OR IAD > 0 THEN GOTO 8270
8260 IF iad = 0 THEN GOTO 8410
8270 FOR I = 1 TO N - 1
8285 FOR k = 1 TO np
8290 PRINT #2, x!(k)
8300 FOR j = 1 TO 4
8310 PRINT #2, DL!(I, j, k)
8320 NEXT j
8330 NEXT k
8340 FOR k = 1 TO np
8345 PRINT #2, x!(k)
8350 FOR j = 1 TO 4
8360 PRINT #2, DR!(I, j, k)
8370 NEXT j
8380 NEXT k
8390 NEXT I
8400 REM*****BEAM FORCES*******************************
8410 FOR I = 1 TO N STEP 2
8420 FOR k = 1 TO np
8440 PRINT #2, x!(k)
8450 FOR j = 1 TO 6
8460 PRINT #2, FB!(I, j, k)
8470 NEXT j
8480 NEXT k
8500 IF I - N < 0 THEN GOTO 8520
```

```
8510 IF I - N >= 0 THEN GOTO 8610
8520 ii = I + 1
8540 FOR k = 1 TO np
8550 PRINT #3, z!(k)
8560 FOR j = 1 TO 6
8570 PRINT #3, FB!(ii, j, k)
8580 NEXT j
8590 NEXT k
8595 NEXT I
8600 REM*****BEAM STRESSES*************************
8610 FOR I = 1 TO N STEP 2
8630 FOR JJ = 1 TO 2
8640 i = I + JJ - 1
8650 ii = ibdm(i)
8670 FOR k = 1 TO 4
8680 PRINT #3, yy!(ii, k)
8690 PRINT #3, zz!(ii, k)
8700 NEXT k
8710 FOR j = 1 TO np
8720 A! = FB!(i, 1, j) / EA!(ii)
8730 AA! = FB!(i, 5, j) / EBMI!(ii)
8740 AAA! = FB!(i, 6, j) / TBMI!(ii)
8750 FOR k = 1 TO 4
8760 bet!(k, j, i) = -A! + AA! * yy!(ii, k) + AAA! * (zz!(ii, k) - F!(ii, 4))
8770 NEXT k
     PRINT #3, x!(j)
8780 FOR m = 1 TO 4
8800 PRINT #3, bet!(m, j, i)
8810 NEXT m
8820 NEXT j
     IF i - N < 0 THEN GOTO 8830
     IF i - N >= 0 THEN GOTO 8860
8830 NEXT JJ
8840 NEXT I
8850 REM*****SHEAR KEY FORCES*************************
8860 FOR I = 1 TO N - 1 STEP 2
8880 FOR k = 1 TO np
8890 PRINT #3, x!(k)
8900 FOR j = 1 TO 4
8910 PRINT #3, FS(I, j, k)
8930 NEXT j
8930 NEXT k
8940 IF I - N + 1 < 0 THEN GOTO 8960
8950 IF I - N + 1 >= 0 THEN GOTO 9040
8960 ii = I + 1
8980 FOR k = 1 TO np
8990 FOR j = 1 TO 4
9000 PRINT #3, FS(ii, j, k)
9010 NEXT j
9020 NEXT k
9030 NEXT I
     CLOSE #3
     OPEN "O", #4, "BEAM.DAT"
     PRINT #4, FILE$
     PRINT #4, prob
     PRINT #4, KEY$$
     PRINT #4, ang$
     CLOSE #4
9040 RETURN
```

```
REM*****************************************************
REM                          PRINTT.BAS
REM            THIS FILE IS USED FOR SELECTING
REM     THE THEORY FOR PRINTING THE RESULT ON PRINTER
REM*****************************************************
OPEN "I", #3, "DISK.DAT"
 INPUT #3, PR$
 INPUT #3, DA$
CLOSE #3
OPEN "I", #4, "LAEN.DAT"
 INPUT #4, FILE$
 INPUT #4, pro$
 INPUT #4, KEY$
'INPUT #4, ma$
CLOSE #4
IF KEY$ = "SPRING TYPE" THEN a$ = PR$ + ":\MULTPRO\SPRINGT.EXE"
IF KEY$ = "PLATE TYPE" THEN a$ = PR$ + ":\MULTPRO\PLATET.EXE"
IF KEY$ = "TRUSS TYPE" THEN a$ = PR$ + ":\MULTPRO\TRUSST.EXE"
SHELL a$
END
```

```
10    REM**************************************************************
20    REM                          SPRINGT.BAS
30    REM THIS PROGRAM ENABLES THE ANALYSIS OF SIMPLY SUPPORTED MULTIBEAM
40    REM STRUCTURES WITH SPRING TYPE SHEAR KEYS PRINT DATA ON PRINTER
100   REM**************************************************************
      CLS
      '$DYNAMIC
      DIM TITLE$(16), NEQ(40)
      DIM units$(2), NSETS, ind, ASIN!(15), ACOS!(15), T!(16)
      DIM P!(10, 8), SA!(10), YBMI!(10), ZBMI!(10), TBTJ!(10), G!(10), BTYP$(10, 3)
      DIM S!(10, 8), YY!(10, 4), ZZ!(10, 4), M!(29, 24), BS(10, 4), Wet(4, 15, 30)
      DIM r!(16), v!(15), w!(15), c!(15), e!(15), tpida(15, 2), Idn(15), z!(15)
      DIM Q!(29, 8), DL!(29, 4, 15), DR!(29, 4, 15), FS!(29, 4, 15), iadn(29)
      DIM SK!(120, 40), RR!(120), ibdn(30), FB!(30, 6, 15), crr!(30, 4, 15), F!(120)
      OPEN "I", #2, "disk.dat"
       INPUT #2, prt
       INPUT #2, das
      CLOSE #2
      OPEN "I", #4, "KARN.DAT"
       INPUT #4, FILE$
       INPUT #4, prod
       INPUT #4, KEYS$
       INPUT #4, engs
      CLOSE #4
      file$ = das + ":\multdata\" + FILE$ + ".prn"
      OPEN "I", #2, file$
540   DIM SCTP$(5)
550   SCTP$(1) = "RECTANGULAR"
560   SCTP$(2) = "TEE SECTION"
570   SCTP$(3) = "III SECTION"
580   SCTP$(4) = "HOLLOW CORE"
590   SCTP$(5) = "BOX SECTION"
      CLS
      LPRINT "     ******************************************************************"
      LPRINT "                       OUTPUT RESULTS OF MULTIBEAM STRUCTURES"
      LPRINT "     DATE     : "; DATE$; : LPRINT "            PROJECT TITLE : "; prod
      LPRINT "     FILENAME : "; FILE$; : LPRINT "              ENGINEER      : "; engs
      LPRINT "     ******************************************************************"
      LPRINT
      LPRINT "     STRUCTURE IDENTIFICATION"
       INPUT #2, N
       INPUT #2, NBT
       INPUT #2, SPAN
       INPUT #2, units$(1)
      LPRINT "             NO. OF BEAMS        =", N
      LPRINT "             NO. OF BEAM TYPE    =", NBT
      LPRINT "             SPAN LENGTH         =", SPAN
      LPRINT "             UNIT OF LENGTH      =", units$(1)
      LPRINT
      LPRINT "     BEAM TYPE DISTRIBUTION   ( BEAM NO./BEAM TYPE )"
1060  FOR I = 1 TO N
      IF I = 1 THEN LPRINT : : LPRINT "          ";
      IF I = 8 THEN LPRINT : LPRINT "          ";
      IF I = 15 THEN LPRINT : LPRINT "          ";
      IF I = 22 THEN LPRINT : LPRINT "          ";
      IF I = 29 THEN LPRINT : LPRINT "          ";
       INPUT #2, ibdn(I)
1070  LPRINT USING "  ##"; I;
      LPRINT "/"; ibdn(I);
1080  NEXT I
      LPRINT
      LOCATE 24, 5: INPUT "ENTER TO CONTINUE ===> ", q
      CLS
      FOR I = 1 TO NBT
       INPUT #2, BTYP$(I, 1)
      IF BTYP$(I, 1) = "RECTANGULAR" THEN GOTO 12650
      IF BTYP$(I, 1) = "TEE SECTION" THEN GOTO 12680
      IF BTYP$(I, 1) = "III SECTION" THEN GOTO 12680
      IF BTYP$(I, 1) = "HOLLOW CORE" THEN GOTO 12750
      IF BTYP$(I, 1) = "BOX SECTION" THEN GOTO 12780
12650  INPUT #2, P!(I, 3)
       INPUT #2, P!(I, 4)
       INPUT #2, P!(I, 1)
       INPUT #2, P!(I, 2)
       INPUT #2, SA!(I)
       INPUT #2, YBMI!(I)
       INPUT #2, ZBMI!(I)
       INPUT #2, TBTJ!(I)
       INPUT #2, G!(I)
12670 GOTO 12810
12680  INPUT #2, P!(I, 3)
       INPUT #2, P!(I, 4)
       INPUT #2, P!(I, 1)
       INPUT #2, P!(I, 2)
       INPUT #2, SA!(I)
       INPUT #2, YBMI!(I)
       INPUT #2, ZBMI!(I)
       INPUT #2, TBTJ!(I)
       INPUT #2, G!(I)
       INPUT #2, P!(I, 6)
12690 IF BTYP$(I, 1) = "RECTANGULAR" THEN GOTO 12650
      IF BTYP$(I, 1) = "TEE SECTION" THEN GOTO 12700
      IF BTYP$(I, 1) = "III SECTION" THEN GOTO 12710
12700 PRINT
12705 GOTO 12740
12710  INPUT #2, P!(I, 5)
       INPUT #2, P!(I, 8)
12740 GOTO 12810
12750  INPUT #2, P!(I, 3)
       INPUT #2, P!(I, 4)
       INPUT #2, P!(I, 1)
       INPUT #2, P!(I, 2)
       INPUT #2, SA!(I)
       INPUT #2, YBMI!(I)
       INPUT #2, ZBMI!(I)
       INPUT #2, TBTJ!(I)
       INPUT #2, G!(I)
       INPUT #2, P!(I, 5)
       INPUT #2, P!(I, 6)
       INPUT #2, NH
12770 GOTO 12810
12780  INPUT #2, P!(I, 3)
       INPUT #2, P!(I, 4)
       INPUT #2, P!(I, 1)
       INPUT #2, P!(I, 2)
       INPUT #2, SA!(I)
       INPUT #2, YBMI!(I)
       INPUT #2, ZBMI!(I)
       INPUT #2, TBTJ!(I)
       INPUT #2, G!(I)
       INPUT #2, P!(I, 5)
       INPUT #2, P!(I, 6)
       INPUT #2, NH
12810 NEXT I

2500  REM**************************************************************
2510  REM                    SUBROUTINE CSOPTP
2520  REM THIS SUBROUTINE PRINTS CALCULATED PROPERTIES OF BEAM
2530  REM**************************************************************
2590  FOR I = 1 TO NBT
      CLS
      LPRINT
```

```
      LPRINT "      BEAM TYPE  "; I; "("; BTYPE(I, 1); ")"
      LPRINT "                DIMENSION                    :"
      LPRINT "               (1)  =   "; USING "####.###"; P(I, 3);
      LPRINT "          :       E-MOD    ="; : LPRINT USING " #.##^^^^"; P(I, 1)
      LPRINT "               (2)  =   "; USING "####.###"; P(I, 4);
      LPRINT "          :       POIS     ="; P(I, 2)
      LPRINT "               (3)  =   "; USING "####.###"; P(I, 5);
      LPRINT "          :       AREA     ="; BA(I)
      LPRINT "               (4)  =   "; USING "####.###"; P(I, 6);
      LPRINT "          :       I-Y      ="; TBMI(I)
      LPRINT "               (5)  =   "; USING "####.###"; P(I, 7);
      LPRINT "          :       I-Z      ="; ZBMI(I)
      LPRINT "               (6)  =   "; USING "####.###"; P(I, 8);
      LPRINT "          :       J        ="; TBTJ(I)
      LPRINT "          (BOXES) =   "; USING "########"; WW;
      LPRINT "          :       G        ="; G(I)
      LOCATE 24, 5: INPUT "ENTER TO CONTINUE ---> ", q
2110  NEXT I
3000  REM*****************************************************
3020  REM THIS SUBROUTINE READS AND PRINTS SHEAR KEY PROPERTIES
3030  REM*****************************************************
      CLS
      LPRINT
      LPRINT "      SPRING TYPE SHEAR KEY"
       INPUT #2, KEYS$
       INPUT #2, NSKTS
      LPRINT "                 NO. OF SHEAR KEY   =", NSKTS
      LPRINT
      LPRINT "      SHEAR KEY TYPE DISTRIBUTION   ( SHEAR KEY NO./SHEAR KEY TYPE )"
      FOR I = 1 TO N - 1
      IF I = 1 THEN LPRINT : : LPRINT "          ";
      IF I = 8 THEN LPRINT : LPRINT "         ";
      IF I = 15 THEN LPRINT : LPRINT "         ";
      IF I = 22 THEN LPRINT : LPRINT "         ";
      IF I = 29 THEN LPRINT : LPRINT "         ";
       INPUT #2, isdn(I)
      LPRINT USING "  ##"; I;
      LPRINT "/"; isdn(I);
3200  NEXT I
3210  IF NSKTS - 10 <= 0 THEN GOTO 3250
3220  IF NSKTS - 10 > 0 THEN GOTO 3330
3230  GOTO 3620
3250  LPRINT ""
      LPRINT ""
      LPRINT "      KEY NO.        X           Y           Z           G   1.LEVE  2.LEVEL"
      FOR I = 1 TO NSKTS
      LPRINT USING "      ##  "; I;
      FOR J = 1 TO 8
       INPUT #2, SI(I, J)
      NEXT J
3270  LPRINT USING "  #.###^^^^"; SI(I, 1);
      LPRINT USING "  #.###^^^^"; SI(I, 2);
      LPRINT USING "  #.###^^^^"; SI(I, 3);
      LPRINT USING "  #.###^^^^"; SI(I, 4);
      LPRINT USING " ####.###"; SI(I, 5);
      LPRINT USING " ####.###"; SI(I, 6)
3620  NEXT I
      LOCATE 24, 4: INPUT " ENTER TO CONTINUE ---> ", q
      CLS
       INPUT #2, lc
       INPUT #2, units(1)
       INPUT #2, units(2)
       INPUT #2, NL
       INPUT #2, nhm
       INPUT #2, INC
       INPUT #2, isd
```

```
      CLS
      LPRINT
      LPRINT "     LOAD DATA"
      LPRINT "            UNIT OF FORCES                              = "; units(1)
      LPRINT "            NUMBER OF LOAD                              = "; NL
      LPRINT "            NUMBER OF HARMONICS                         = "; nhm;
      LPRINT "+"; INC
      FOR I = 1 TO NL
      CLS
       INPUT #2, ldn(I)
4320   INPUT #2, r!(I)
       INPUT #2, v!(I)
       INPUT #2, u!(I)
       INPUT #2, c!(I)
       INPUT #2, e!(I)
       INPUT #2, tplds(I, 1)
      LPRINT
      LPRINT "     LOAD ON BEAM NUMBER                                = "; ldn(I)
      LPRINT "            LOAD MAGNITUDE OF                           = "; r!(I)
      LPRINT "            WIDTH OF LOAD                               = "; v!(I)
      LPRINT "            LENGTH OF LOAD                              = "; u!(I)
      LPRINT "            LONGITUDINAL POSITION OF LOAD CENTROID      = "; c!(I)
      LPRINT "            LOAD ECCENTRICITY                           = "; e!(I)
      LPRINT "            LOAD TYPE                                   = "; tplds(I, 1)
      LOCATE 24, 5: INPUT "ENTER TO CONTINUE ---> ", q
      NEXT I
      CLS
18000 REM****************************************
18020 REM THIS SUBROUTINE READS ALL THE RESULTS
18030 REM****************************************
18030 REM*****BEAM DISPLACEMENTS*****
       INPUT #2, np
18060 FOR I = 1 TO N STEP 2
18080 FOR k = 1 TO np
18085  INPUT #2, xl(k)
18090 FOR J = 1 TO 4
18100  INPUT #2, rrr!(I, J, k)
18110 NEXT J
18120 NEXT k
18130 IF I - N < 0 THEN GOTO 18150
18140 IF I - N >= 0 THEN GOTO 18240
18150 II = I + 1
18170 FOR k = 1 TO np
18180  INPUT #2, xl(k)
18190 FOR J = 1 TO 4
18200  INPUT #2, rrr!(II, J, k)
18210 NEXT J
18220 NEXT k
18230 NEXT I
18240 REM*****SHEAR KEY DISPLACEMENTS*****
18250 IF isd < 0 OR isd > 0 THEN GOTO 18270
18260 IF isd = 0 THEN GOTO 18410
18270 FOR I = 1 TO N - 1
18280 FOR k = 1 TO np
18290  INPUT #2, xl(k)
18300 FOR J = 1 TO 4
18310  INPUT #2, DL!(I, J, k)
18320 NEXT J
18330 NEXT k
18340 FOR k = 1 TO np
18345  INPUT #2, xl(k)
18350 FOR J = 1 TO 4
18360  INPUT #2, DR!(I, J, k)
18370 NEXT J
18380 NEXT k
18390 NEXT I
```

```
18400 REM*****BEAM FORCES*****
18410 FOR I = 1 TO N STEP 2
18430 FOR k = 1 TO np
18440  INPUT #2, x!(k)
18450 FOR J = 1 TO 6
18460  INPUT #2, FB!(I, J, k)
18470 NEXT J
18480 NEXT k
18500 IF I - N < 0 THEN GOTO 18520
18510 IF I - N >= 0 THEN GOTO 18610
18520 II = I + 1
18540 FOR k = 1 TO np
18550  INPUT #2, x!(k)
18560 FOR J = 1 TO 6
18570  INPUT #2, FB!(II, J, k)
18580 NEXT J
18590 NEXT k
18595 NEXT I
18600 REM*****BEAM STRESSES*****
18610 FOR I = 1 TO N
18630 FOR jj = 1 TO 1
18640 I = I + jj - 1
18650 II = ibdm(I)
18670 FOR k = 1 TO 4
18680  INPUT #2, FY!(II, k)
18690  INPUT #2, EZ!(II, k)
18700 NEXT k
18710 FOR J = 1 TO np
       INPUT #2, x!(J)
18760 FOR m = 1 TO 4
18800  INPUT #2, sst!(m, J, I)
18810 NEXT m
18820 NEXT J
      IF I - N < 0 THEN GOTO 18630
      IF I - N >= 0 THEN GOTO 18850
18635 NEXT jj
18840 NEXT I
18850 REM*****SHEAR KEY FORCES*****
18860 FOR I = 1 TO N - 1 STEP 2
18880 FOR k = 1 TO np
18890  INPUT #2, x!(k)
18900 FOR J = 1 TO 4
18910  INPUT #2, FS(I, J, k)
18920 NEXT J
18930 NEXT k
18940 IF I - N + 1 < 0 THEN GOTO 18960
18950 IF I - N + 1 >= 0 THEN GOTO 19040
18960 II = I + 1
18980 FOR k = 1 TO np
18990 FOR J = 1 TO 4
19000  INPUT #2, FS!(II, J, k)
19010 NEXT J
19020 NEXT k
19030 NEXT I
19040 CLOSE #2
10010 CLS
10020 GOSUB 10500
10180 LOCATE 9, 29: PRINT " "; N; "BEAMS "; N - 1; "KEYS "
10190 LOCATE 11, 33: PRINT "< 1 >  BEAM DISPLACEMENTS"
10200 LOCATE 12, 37: PRINT "< 2 >   SHEAR KEY DISPLACMENTS "
10210 LOCATE 13, 37: PRINT "< 3 >   BEAM FORCES"
10220 LOCATE 14, 37: PRINT "< 4 >   BEAM STRESS "
10230 LOCATE 15, 37: PRINT "< 5 >   SHEAR KEY FORCES"
10240 LOCATE 18, 37: PRINT "< 6 >   EXIT TO MAIN LINE"
10250 LOCATE 21, 15: PRINT "ENTER YOUR SELECTION ===> ";
10260 LOCATE 21, 40: INPUT Z
      IF Z = 0 THEN END
      IF Z < 1 OR Z > 5 THEN GOTO 10010
      LOCATE 22, 15: PRINT "BEAM OR SHEAR KEY NO.===> ";
      LOCATE 22, 40: INPUT I
      IF I < 0 OR I > N THEN GOTO 10010
      IF Z = 2 AND I > N - 1 THEN GOTO 10010
      IF Z = 5 AND I > N - 1 THEN GOTO 10010
10270 IF Z = 6 THEN END
10280 IF Z < 1 OR Z > 5 THEN GOTO 10250
10290 ON Z GOTO 10300, 10310, 10320, 10330, 10340
10300 GOSUB 8050: GOTO 10010
10310 GOSUB 8240: GOTO 10010
10320 GOSUB 8400: GOTO 10010
10330 GOSUB 8800: GOTO 10010
10340 GOSUB 8850: GOTO 10010
10500 REM HEAD OF FILE
10510 LOCATE 3, 13: PRINT ""
      LOCATE 5, 31: PRINT "M U L T I B E A M"
10520 LOCATE 7, 22: PRINT "C H O N K A Z H   U N I V E R S I T Y"
10530 LOCATE 9, 13: PRINT "*************************************************************"
10540 LOCATE 11, 33: PRINT "SELECT NEXT ACTION"
10550 LOCATE 20, 13: PRINT "*************************************************************"
10560 RETURN
8000  REM************************************
8010  REM          SUBROUTINE OUTPT
8020  REM THIS SUBROUTINE PRINTS ALL THE RESULTS
8030  REM************************************
8050  REM*****BEAM DISPLACEMENTS*****
      CLS
      LPRINT "                    ****** DISPLACEMENTS OF BEAMS AT C.G.  ******"
8070  LPRINT "                                        BEAM No.="; I
      LPRINT "  AT POINT     LONGITUDINAL     HORIZONTAL        VERTICAL        ROTATION"
8080  FOR k = 1 TO np
8085  LPRINT USING "    #.###"; x!(k); : LPRINT "L";
8100  LPRINT USING "       ##.###^^^^"; zzz!(I, 1, k);
      LPRINT USING "       ##.###^^^^"; zzz!(I, 2, k);
      LPRINT USING "       ##.###^^^^"; zzz!(I, 3, k);
      LPRINT USING "       ##.###^^^^"; zzz!(I, 4, k)
8120  NEXT k
      GOSUB 9030
      RETURN
8240  REM*****SHEAR KEY DISPLACMENTS*****
      CLS
      IF ind = 0 THEN RETURN
      LPRINT "                    ******  DISPLACEMENT OF THE JOINTS    ******"
      LPRINT "                                   LEFT SHEAR KEY NO. "; I
      LPRINT "  AT POINT     LONGITUDINAL     HORIZONTAL        VERTICAL        ROTATION"
8250  IF ind < 0 OR ind > 0 THEN GOTO 8280
8260  IF ind = 0 THEN RETURN
8280  FOR k = 1 TO np
8290  LPRINT USING "    #.###"; x!(k); : LPRINT "L";
8310  LPRINT USING "       ##.###^^^^"; DL!(I, 1, k);
      LPRINT USING "       ##.###^^^^"; DL!(I, 2, k);
      LPRINT USING "       ##.###^^^^"; DL!(I, 3, k);
      LPRINT USING "       ##.###^^^^"; DL!(I, 4, k)
8330  NEXT k
      GOSUB 9030
      CLS
      LPRINT "                    ******  DISPLACEMENT OF THE JOINTS   ******"
      LPRINT "                                  RIGHT SHEAR KEY NO. "; I
      LPRINT "  AT POINT     LONGITUDINAL     HORIZONTAL        VERTICAL        ROTATION"
      FOR k = 1 TO np
      LPRINT USING "    #.###"; x!(k); : LPRINT "L";
      LPRINT USING "       ##.###^^^^"; DR!(I, 1, k);
      LPRINT USING "       ##.###^^^^"; DR!(I, 2, k);
      LPRINT USING "       ##.###^^^^"; DR!(I, 3, k);
```

```
      LPRINT USING "        ##.###^^^^"; DB!(I, 4, k);
      NEXT k
      GOSUB 9050
      RETURN
5400  REM*****BEAM FORCES*****
5410  CLS
      LPRINT "                    ******            BEAM FORCES            ******"
5430  LPRINT "                                      BEAM No.="; I
      LPRINT " AT POINT  LONGITUDINAL  HORIZONTAL   VERTICAL    TORSION       M-ZZ        M-YY"
5450  FOR k = 1 TO np
5460  LPRINT USING "  #.### "; x!(k); : LPRINT "L";
5470  LPRINT USING "    ##.###^^^^"; FB!(I, 1, k);
      LPRINT USING "   ##.###^^^^"; FB!(I, 2, k);
      LPRINT USING " ##.###^^^^"; FB!(I, 3, k);
      LPRINT USING " ##.###^^^^"; FB!(I, 4, k);
      LPRINT USING " ##.###^^^^"; FB!(I, 5, k);
      LPRINT USING " ##.###^^^^"; FB!(I, 6, k)
5480  NEXT k
      GOSUB 9050
      RETURN
5600  REM*****BEAM STRESSES*****
      CLS
5620  LPRINT "                    ******   FIBER STRESS OF BEAM   ******"
5630  FOR jj = 1 TO j
5640  I = I + jj - 1
5650  II = ibeam(I)
5660  LPRINT "                                      BEAM No."; I
      LPRINT "  AT POINT  ";
5670  FOR k = 1 TO 4
5680  LPRINT USING "   ###.##"; YY!(II, k);
5690  LPRINT USING " ###.## "; ZZ!(II, k);
5700  NEXT k
      LPRINT
5710  FOR J = 1 TO np
5790  LPRINT USING "    #.###"; x!(J); : LPRINT "L";
5800  LPRINT USING "        ##.###^^^^"; bet(I, J, 1);
      LPRINT USING "        ##.###^^^^"; bet(I, J, 2);
      LPRINT USING "        ##.###^^^^"; bet(I, J, 3);
      LPRINT USING "        ##.###^^^^"; bet(I, J, 4)
5820  NEXT J
5830  NEXT jj
      GOSUB 9050
      RETURN
5850  REM*****SHEAR KEY FORCES*****
      CLS
5870  LPRINT "                    ******  INTERNAL FORCES OF SHEAR KEY   ******"
      LPRINT "                                      SHEAR KEYS NO. "; I
      LPRINT "  AT POINT     LONGITUDINAL     HORIZONTAL       VERTICAL       ROTATION"
5890  FOR k = 1 TO np
5900  LPRINT USING "    #.###"; x!(k); : LPRINT "L  ";
5910  LPRINT USING "     ##.###^^^^"; FS!(I, 1, k);
      LPRINT USING "     ##.###^^^^"; FS!(I, 2, k);
      LPRINT USING "     ##.###^^^^"; FS!(I, 3, k);
      LPRINT USING "     ##.###^^^^"; FS!(I, 4, k)
5930  NEXT k
      GOSUB 9050
9040  RETURN
9050  LPRINT "  ***********************************************************************"
      LPRINT
      RETURN
```

```
10    REM*************************************************************************
20    REM                              PLATE1.BAS
30    REM     THIS PROGRAM ENABLES THE ANALYSIS OF SIMPLY SUPPORTED MULTIBEAM
40    REM        STRUCTURES WITH PLATE TYPE SHEAR KEYS PRINT DATA ON PRINTER
100   REM*******************************************************************
      CLS
      '$DYNAMIC
      DIM TITLE$(16), HED(40)
      DIM UNIT$(2), NEXTS, IBD, ASIN!(15), ACOS!(15), T!(16)
      DIM P!(10, 8), EA!(10), YBMI!(10), ZBMI!(10), TBTJ!(10), G!(10), BTYP$(10, 2)
      DIM S!(10, 8), YY!(10, 4), ZZ!(10, 4), H!(29, 24), B!(10, 4), bs!(4, 15, 30)
      DIM R!(15), Y!(15), U!(15), C!(15), E!(15), TPLDS(15, 3), LDN(15), X!(15)
      DIM D!(29, 8), DL!(29, 4, 15), DR!(29, 4, 15), FSL!(29, 4, 15), FSR!(29, 4, 15), ISDN(29)
      DIM SK$(130, 40), XB$(130), IBDN(30), FB!(30, 6, 15), rrr!(30, 4, 15), F!(130)
      OPEN "I", #2, "disk.dat"
       INPUT #2, PR$
       INPUT #2, DA$
      CLOSE #3
      OPEN "I", #4, "KAEN.DAT"
       INPUT #4, FILE$
       INPUT #4, pro$
       INPUT #4, KEYS$
       INPUT #4, eng$
      CLOSE #4
      FILE5$ = DA$ + ":\multdata\" + FILE$ + ".prn"
      OPEN "I", #2, FILE5$
540   DIM SCTP$(5)
550   SCTP$(1) = "RECTANGULAR"
560   SCTP$(2) = "TEE SECTION"
570   SCTP$(3) = "III SECTION"
580   SCTP$(4) = "HOLLOW CORE"
590   SCTP$(5) = "BOX SECTION"
      CLS
      LPRINT "     ****************************************************************"
      LPRINT "              OUTPUT RESULTS OF MULTIBEAM STRUCTURES"
      LPRINT "     DATE      : "; DATE$; : LPRINT "    PROJECT TITLE : "; pro$
      LPRINT "     FILENAME : "; FILE$; : LPRINT "    ENGINEER      : "; eng$
      LPRINT "     ****************************************************************"
      LPRINT
      LPRINT "     STRUCTURE IDENTIFICATION"
      INPUT #2, N
      INPUT #2, NBT
      INPUT #2, SPAN
      INPUT #2, UNIT$(1)
      LPRINT "          NO. OF BEAMS        ="; N
      LPRINT "          NO. OF BEAM TYPE    ="; NBT
      LPRINT "          SPAN LENGTH         ="; SPAN
      LPRINT "          UNIT OF LENGTH      ="; UNIT$(1)
      LPRINT
      LPRINT "     BEAM TYPE DISTRIBUTION   [ BEAM NO./BEAM TYPE ]"
1060  FOR I = 1 TO N
      IF I = 1 THEN LPRINT : : LPRINT "           ";
      IF I = 8 THEN LPRINT : LPRINT "           ";
      IF I = 15 THEN LPRINT : LPRINT "           ";
      IF I = 22 THEN LPRINT : LPRINT "           ";
      IF I = 29 THEN LPRINT : LPRINT "           ";
       INPUT #2, IBDN(I)
1070  LPRINT USING "  ##"; I;
      LPRINT "/"; IBDN(I);
1080  NEXT I
      PRINT
      LOCATE 24, 5: INPUT "ENTER TO CONTINUE ==> ", q
      CLS
```

```
      FOR I = 1 TO NBT
       INPUT #2, BTYP$(I, 1)
      IF BTYP$(I, 1) = "RECTANGULAR" THEN GOTO 12650
      IF BTYP$(I, 1) = "TEE SECTION" THEN GOTO 12680
      IF BTYP$(I, 1) = "III SECTION" THEN GOTO 12680
      IF BTYP$(I, 1) = "HOLLOW CORE" THEN GOTO 12750
      IF BTYP$(I, 1) = "BOX SECTION" THEN GOTO 12780
12650 INPUT #2, P!(I, 3)
      INPUT #2, P!(I, 4)
      INPUT #2, P!(I, 1)
      INPUT #2, P!(I, 2)
      INPUT #2, EA!(I)
      INPUT #2, YBMI!(I)
      INPUT #2, ZBMI!(I)
      INPUT #2, TBTJ!(I)
      INPUT #2, G!(I)
12670 GOTO 12810
12680 INPUT #2, P!(I, 3)
      INPUT #2, P!(I, 4)
      INPUT #2, P!(I, 1)
      INPUT #2, P!(I, 2)
      INPUT #2, EA!(I)
      INPUT #2, YBMI!(I)
      INPUT #2, ZBMI!(I)
      INPUT #2, TBTJ!(I)
      INPUT #2, G!(I)
      INPUT #2, P!(I, 6)
12690 IF BTYP$(I, 1) = "RECTANGULAR" THEN GOTO 12650
      IF BTYP$(I, 1) = "TEE-SECTION" THEN GOTO 12700
      IF BTYP$(I, 1) = "III-SECTION" THEN GOTO 12710
12700 PRINT
12705 GOTO 12740
12710 INPUT #2, P!(I, 5)
      INPUT #2, P!(I, 6)
12740 GOTO 12810
12750 INPUT #2, P!(I, 3)
      INPUT #2, P!(I, 4)
      INPUT #2, P!(I, 1)
      INPUT #2, P!(I, 2)
      INPUT #2, EA!(I)
      INPUT #2, YBMI!(I)
      INPUT #2, ZBMI!(I)
      INPUT #2, TBTJ!(I)
      INPUT #2, G!(I)
      INPUT #2, P!(I, 5)
      INPUT #2, P!(I, 6)
      INPUT #2, mm
12770 GOTO 12810
12780 INPUT #2, P!(I, 3)
      INPUT #2, P!(I, 4)
      INPUT #2, P!(I, 1)
      INPUT #2, P!(I, 2)
      INPUT #2, EA!(I)
      INPUT #2, YBMI!(I)
      INPUT #2, ZBMI!(I)
      INPUT #2, TBTJ!(I)
      INPUT #2, G!(I)
      INPUT #2, P!(I, 5)
      INPUT #2, P!(I, 6)
      INPUT #2, mm
12810 NEXT I

2500  REM*************************************************************************
2520  REM             THIS SUBROUTINE PRINTS CALCULATED PROPERTIES OF BEAM
2530  REM*************************************************************************
2590  FOR I = 1 TO NBT
```

```
     CLS
     LPRINT
     LPRINT "      BEAM TYPE  "; I, "("; BTYPE$(I, 1); ")"
     LPRINT "      DIMENSION              :"
     LPRINT "        (1)  "; USING "######"; P!(I, 3);
     LPRINT "      :        E-MOD    ="; : LPRINT USING " #.##^^^^"; P!(I, 1)
     LPRINT "        (2)  "; USING "######"; P!(I, 4);
     LPRINT "      :        POIS     ="; P!(I, 2)
     LPRINT "        (3)  "; USING "######"; P!(I, 5);
     LPRINT "      :        AREA     ="; SA!(I)
     LPRINT "        (4)  "; USING "######"; P!(I, 6);
     LPRINT "      :        I-Y      ="; YMI!(I)
     LPRINT "        (5)  "; USING "######"; P!(I, 7);
     LPRINT "      :        I-Z      ="; ZMI!(I)
     LPRINT "        (6)  "; USING "######"; P!(I, 8);
     LPRINT "      :        J        ="; TRTJ!(I)
     LPRINT "        (NODES)"; USING "######"; NN;
     LPRINT "      :        G        ="; G(I)
     LOCATE 24, 5: INPUT "ENTER TO CONTINUE ---> ", Q
2810 NEXT I
3000 REM*******************************************************************
3020 REM          THIS SUBROUTINE READS AND PRINTS SHEAR KEY PROPERTIES
3030 REM*******************************************************************
     CLS
     LPRINT
     LPRINT "     PLATE TYPE SHEAR KEY"
      INPUT #2, KEYS$
      INPUT #2, NSKTS
     LPRINT "     NO. OF SHEAR KEY   =", NSKTS
     LPRINT
     LPRINT "     SHEAR KEY TYPE DISTRIBUTION   ( SHEAR KEY NO./SHEAR KEY TYPE )"
     FOR I = 1 TO N - 1
     IF I = 1 THEN LPRINT ; : LPRINT "        ";
     IF I = 8 THEN LPRINT : LPRINT "        ";
     IF I = 15 THEN LPRINT : LPRINT "        ";
     IF I = 22 THEN LPRINT : LPRINT "        ";
     IF I = 29 THEN LPRINT : LPRINT "        ";
      INPUT #2, ISDN(I)
     LPRINT USING "  ##"; I;
     LPRINT "/"; ISDN(I);
3200 NEXT I
3210 IF NSKTS - 10 <= 0 THEN GOTO 3250
3220 IF NSKTS - 10 > 0 THEN GOTO 3230
3230 GOTO 3620
3250 LPRINT
     LPRINT
     LPRINT "     KEY NO. E-MOD     THK.      BZ       VC L.LEVEL R.LEVEL    POIS"
     FOR I = 1 TO NSKTS
     LPRINT USING "  ##  "; I;
     FOR J = 1 TO 8
      INPUT #2, S!(I, J)
     NEXT J
3270 LPRINT USING "  #.##^^^^"; S!(I, 1);
     LPRINT USING "  #####.##"; S!(I, 2);
     LPRINT USING "  #####.##"; S!(I, 3);
     LPRINT USING "  #####.##"; S!(I, 4);
     LPRINT USING "  #####.##"; S!(I, 5);
     LPRINT USING "  #####.##"; S!(I, 6);
     LPRINT USING "  #####.##"; S!(I, 7)
3620 NEXT I
     LOCATE 24, 4: INPUT " ENTER TO CONTINUE ---> ", Q
     CLS
      INPUT #2, lc
      INPUT #2, UNITS$(1)
      INPUT #2, UNITS$(2)
      INPUT #2, NL
      INPUT #2, NHN
      INPUT #2, INC
      INPUT #2, ISD
     CLS
     LPRINT
     LPRINT "      LOAD DATA"
     LPRINT "      LOAD CASE No.                    = "; lc
     LPRINT "      UNIT OF FORCES                   = "; UNITS$(1)
     LPRINT "      NUMBER OF LOAD                   = "; NL
     LPRINT "      NUMBER OF HARMONICS              = "; NHN;
     LPRINT "@"; INC
     FOR I = 1 TO NL
     CLS
     INPUT #2, LON(I)
4320 INPUT #2, R!(I)
     INPUT #2, V!(I)
     INPUT #2, U!(I)
     INPUT #2, C!(I)
     INPUT #2, E!(I)
     INPUT #2, TPLD$(I, 1)
     LPRINT
     LPRINT "      LOAD ON BEAM NUMBER                          = ", LON(I)
     LPRINT "      LOAD MAGNITUDE OF                            = "; R!(I)
     LPRINT "      WIDTH OF LOAD                                = "; V!(I)
     LPRINT "      LENGTH OF LOAD                               = "; U!(I)
     LPRINT "      LONGITUDINAL POSITION OF LOAD CENTROID = "; C!(I)
     LPRINT "      LOAD ECCENTRICITY                            = "; E!(I)
     LPRINT "      LOAD TYPE                                    =  "; TPLD$(I, 1)
     LOCATE 24, 5: INPUT "ENTER TO CONTINUE ---> ", Q
     NEXT I
     CLS
18000 REM******************************************************************
18020 REM                  THIS SUBROUTINE READS ALL THE RESULTS
18030 REM******************************************************************
18050 REM*****BEAM DISPLACEMENTS************************
      INPUT #2, NP
18060 FOR I = 1 TO N STEP 2
18080 FOR K = 1 TO NP
18085 INPUT #2, X!(K)
18090 FOR J = 1 TO 4
18100 INPUT #2, FFF!(I, J, K)
18110 NEXT J
18120 NEXT K
18130 IF I - N < 0 THEN GOTO 18150
18140 IF I - N >= 0 THEN GOTO 18240
18150 II = I + 1
18170 FOR K = 1 TO NP
18180 INPUT #2, X!(K)
18190 FOR J = 1 TO 4
18200 INPUT #2, FFF!(II, J, K)
18210 NEXT J
18220 NEXT K
18230 NEXT I
18240 REM*****SHEAR KEY DISPLACEMENTS*****************
18250 IF ISD < 0 OR ISD > 0 THEN GOTO 18270
18260 IF ISD = 0 THEN GOTO 18410
18270 FOR I = 1 TO N - 1
18280 FOR K = 1 TO NP
18290 INPUT #2, XS(K)
18300 FOR J = 1 TO 4
18310 INPUT #2, DL!(I, J, K)
18320 NEXT J
18330 NEXT K
18340 FOR K = 1 TO NP
18341 INPUT #2, X!(K)
18350 FOR J = 1 TO 4
```

```
18360 INPUT #3, DR!(I, J, K)
18370 NEXT J
18380 NEXT K
18390 NEXT I
18400 REM*****BEAM FORCES*************************
18410 FOR I = 1 TO N STEP 2
18430 FOR K = 1 TO NF
18440 INPUT #2, X!(K)
18450 FOR J = 1 TO 6
18460 INPUT #2, FB!(I, J, K)
18470 NEXT J
18480 NEXT K
18500 IF I - N < 0 THEN GOTO 18520
18510 IF I - N >= 0 THEN GOTO 18610
18520 I2 = I + 1
18540 FOR K = 1 TO NF
18550 INPUT #2, X!(K)
18560 FOR J = 1 TO 6
18570 INPUT #2, FB!(I2, J, K)
18580 NEXT J
18590 NEXT K
18595 NEXT I
18600 REM*****BEAM STRESSES*************************
18610 FOR I = 1 TO N
18630 FOR jj = 1 TO 3
18640 L = I + jj - 1
18650 IF - IBDN(L)
18670 FOR K = 1 TO 4
18680 INPUT #3, TW!(L, K)
18690 INPUT #3, BF!(L, K)
18700 NEXT K
18710 FOR J = 1 TO NF
      INPUT #3, X!(J)
18720 FOR m = 1 TO 4
18800 INPUT #2, Sec!(m, J, L)
18810 NEXT m
18820 NEXT J
      IF I - N < 0 THEN GOTO 18830
      IF I - N >= 0 THEN GOTO 18840
18830 NEXT jj
18840 NEXT I
18850 REM*****SHEAR KEY FORCES*************************
18860 FOR I = 1 TO N - 1
19880 FOR K = 1 TO NF
18890 INPUT #2, X!(K)
18900 FOR J = 1 TO 4
18910 INPUT #3, FSK!(I, J, K)
18920 NEXT J
18930 NEXT K
18980 FOR K = 1 TO NF
18990 FOR J = 1 TO 4
19000 INPUT #3, FSKR!(I, J, K)
19010 NEXT J
19020 NEXT K
19030 NEXT I
19040 CLOSE #2
10010 CLS
10020 GOSUB 10500
10130 LOCATE 9, 29: PRINT "   "; N; "BEAMS  "; N - 1; "KEYS  "
10190 LOCATE 11, 37: PRINT "< 1 >   BEAM DISPLACEMENTS"
10200 LOCATE 12, 37: PRINT "< 2 >   SHEAR KEY DISPLACEMENTS"
10210 LOCATE 13, 37: PRINT "< 3 >   BEAM FORCES"
10220 LOCATE 14, 37: PRINT "< 4 >   BEAM STRESS"
10230 LOCATE 15, 37: PRINT "< 5 >   SHEAR KEY FORCES"
10240 LOCATE 16, 37: PRINT "< 0 >   EXIT TO MAIN LINE"
10250 LOCATE 21, 15: PRINT "ENTER YOUR SELECTION ==> ";
10260 LOCATE 21, 40: INPUT Z
      IF Z = 0 THEN END
      IF Z < 1 OR Z > 5 THEN GOTO 10010
      LOCATE 22, 15: PRINT "BEAM OR SHEAR KEY NO.==> ";
      LOCATE 22, 40: INPUT I
      IF I < 0 OR I > N THEN GOTO 10010
10270 IF Z < 0 THEN END
10280 IF Z < 1 OR Z > 5 THEN GOTO 10250
10290 ON Z GOTO 10300, 10310, 10320, 10330, 10340
10300 GOSUB 8050: GOTO 10010
10310 GOSUB 8340: GOTO 10010
10320 GOSUB 8400: GOTO 10010
10330 GOSUB 8600: GOTO 10010
10340 GOSUB 8850: GOTO 10010
10500 REM HEAD OF FILE
10510 LOCATE 3, 13: PRINT ""
      LOCATE 3, 31: PRINT "M U L T I B E A M"
10520 LOCATE 7, 22: PRINT "K E D N E A Z N   U N I V E R S I T Y"
10530 LOCATE 9, 13: PRINT "*****************************************************"
10540 LOCATE 11, 13: PRINT "SELECT NEXT ACTION"
10550 LOCATE 20, 13: PRINT "*****************************************************"
10560 RETURN


8000  REM*****************************************************************
8010  REM                          SUBROUTINE COUTPS
8020  REM                THIS SUBROUTINE PRINTS ALL THE RESULTS
8030  REM*****************************************************************
8050  REM*****BEAM DISPLACEMENTS*********************
      CLS
      LPRINT "    ****** DISPLACEMENTS OF BEAMS AT C.G.  ******"
8070  LPRINT "              BEAM NO.="; I
      LPRINT "  AT POINT       LONGITUDINAL       HORIZONTAL          VERTICAL          ROTATION"
8080  FOR K = 1 TO NF
8085  LPRINT USING "    #.###"; X!(K); : LPRINT "L";
8100  LPRINT USING "    ##.###^^^^"; xxx!(I, 1, K);
      LPRINT USING "    ##.###^^^^"; xxx!(I, 2, K);
      LPRINT USING "    ##.###^^^^"; xxx!(I, 3, K);
      LPRINT USING "    ##.###^^^^"; xxx!(I, 4, K)
8130  NEXT K
      GOSUB 9050
      RETURN
8240  REM*** *SHEAR KEY DISPLACMENTS*****************
      CLS
      IF ISD < 0 THEN RETURN
      LPRINT "    ******   DISPLACEMENT OF THE JOINTS    ******"
      LPRINT "     LEFT SHEAR KEY NO. "; I
      LPRINT "  AT POINT       LONGITUDINAL       HORIZONTAL          VERTICAL          ROTATION"
8250  IF ISD < 0 OR ISD > 4 THEN GOTO 8280
8260  IF ISD = 0 THEN RETURN
8280  FOR K = 1 TO NF
8290  LPRINT USING "    #.###"; X!(K); : LPRINT "L";
8310  LPRINT USING "    ##.###^^^^"; DLS!(I, 1, K);
      LPRINT USING "    ##.###^^^^"; DLS!(I, 2, K);
      LPRINT USING "    ##.###^^^^"; DLS!(I, 3, K);
      LPRINT USING "    ##.###^^^^"; DLS!(I, 4, K)
8330  NEXT K
      GOSUB 9050
      CLS
      LPRINT "    ******   DISPLACEMENT OF THE JOINTS    ******"
      LPRINT "     RIGHT SHEAR KEY NO. "; I
      LPRINT "  AT POINT       LONGITUDINAL       HORIZONTAL          VERTICAL          ROTATION"
      FOR K = 1 TO NF
      LPRINT USING "    #.###"; X!(K); : LPRINT "L";
      LPRINT USING "    ##.###^^^^"; DRS!(I, 1, K);
      LPRINT USING "    ##.###^^^^"; DRS!(I, 2, K);
```

```
     LPRINT USING "    ##.###^^^^"; DR!(I, 3, K);
     LPRINT USING "    ##.###^^^^"; DR!(I, 4, K)
     NEXT K
     GOSUB 9050
     RETURN
8400 REM*****BEAM FORCES*****************************
8410 CLS
     LPRINT "     ******              BEAM FORCES              ******"
8420 LPRINT "          BEAM No.="; I
     LPRINT " AT POINT  LONGITUDINAL  HORIZONTAL   VERTICAL    TORSION       M-ZZ        M-YY"
8430 FOR K = 1 TO NP
8440 LPRINT USING "    #.### "; X!(K); : LPRINT "L";
8460 LPRINT USING "    ##.###^^^^"; FB!(I, 1, K);
     LPRINT USING "    ##.###^^^^"; FB!(I, 2, K);
     LPRINT USING "    ##.###^^^^"; FB!(I, 3, K);
     LPRINT USING "    ##.###^^^^"; FB!(I, 4, K);
     LPRINT USING "    ##.###^^^^"; FB!(I, 5, K);
     LPRINT USING "    ##.###^^^^"; FB!(I, 6, K)
8480 NEXT K
     GOSUB 9050
     RETURN
8600 REM*****BEAM STRESSES***************************
     CLS
8620 LPRINT "     ******   FIBER STRESS OF BEAM   ******"
8630 FOR JJ = 1 TO 1
8640 L = I + JJ - 1
8650 II = IBDN(L)
8660 LPRINT "          BEAM No."; I
     LPRINT "          AT POINT  ";
8670 FOR K = 1 TO 4
8680 LPRINT USING "   ###.## "; YY!(II, K);
8690 LPRINT USING "   ###.## "; ZZ!(II, K);
8700 NEXT K
     LPRINT
8710 FOR J = 1 TO NP
8790 LPRINT USING "    #.###"; X!(J); : LPRINT "L";
8800 LPRINT USING "    ##.###^^^^"; bst(1, J, I);
     LPRINT USING "    ##.###^^^^"; bst(2, J, I);
     LPRINT USING "    ##.###^^^^"; bst(3, J, I);
     LPRINT USING "    ##.###^^^^"; bst(4, J, I);
     LPRINT
8820 NEXT J
8830 NEXT JJ
     GOSUB 9050
     RETURN
8850 REM*****SHEAR KEY FORCES************************
     CLS
8870 LPRINT "     ******   INTERNAL FORCES OF SHEAR KEY   ******"
     LPRINT "              LEFT SHEAR KEYS NO. "; I
     LPRINT " AT POINT     LONGITUDINAL     HORIZONTAL        VERTICAL        ROTATION"
8880 FOR K = 1 TO NP
8890 LPRINT USING "    #.###"; X!(K); : LPRINT "L  ";
8910 LPRINT USING "    ##.###^^^^"; FSL!(I, 1, K);
     LPRINT USING "    ##.###^^^^"; FSL!(I, 2, K);
     LPRINT USING "    ##.###^^^^"; FSL!(I, 3, K);
     LPRINT USING "    ##.###^^^^"; FSL!(I, 4, K)
8930 NEXT K
     GOSUB 9050
9040
     CLS
     LPRINT "                   ******  INTERNAL FORCES OF SHEAR KEY   ******"
     LPRINT "                             RIGHT SHEAR KEY NO.  ", I
     LPRINT " AT POINT     LONGITUDINAL     HORIZONTAL        VERTICAL        ROTATION"
     FOR K = 1 TO NP
     LPRINT USING "    #.###"; X!(K); : LPRINT "L  ";
     LPRINT USING "     ##.###^^^^"; FSR!(I, 1, K);
     LPRINT USING "     ##.###^^^^"; FSR!(I, 2, K);
     LPRINT USING "     ##.###^^^^"; FSR!(I, 3, K);
     LPRINT USING "     ##.###^^^^"; FSR!(I, 4, K)
     NEXT K
     GOSUB 9050
     RETURN
9050 LPRINT "-----------------------------------------------------------------------------------"
     LPRINT
     RETURN
```

```
10    REM*************************************************************************
20    REM                              TRUBET.BAS
30    REM         THIS PROGRAM ENABLES THE ANALYSIS OF SIMPLY SUPPORTED MULTIBEAM
40    REM          STRUCTURES WITH THREE TYPE SHEAR KEYS PRINT DATA ON PRINTER
100   REM*************************************************************************
      CLS
      'ADYNAMIC
      DIM TITLE$(16), MSQ(40)
      DIM units$(2), NSETS, led, ASIN!(15), ACOS!(35), T!(30)
      DIM P!(10, 8), EA!(10), YBMI!(10), ZBMI!(10), TBTJ!(10), G!(10), BTYP$(10, 2)
      DIM a!(10, 6), YY!(10, 4), ZZ!(10, 4), M!(29, 34), B!(10, 4), bs!(4, 15, 30)
      DIM r!(15), s!(15), e!(15), c!(15), e!(15), Lplas(15, 2), Idn(15), x!(15)
      DIM D!(29, 6), DL!(29, 4, 15), DM!(29, 4, 15), PK!(29, 4, 15), iadn(29)
      DIM SK!(120, 40), EB!(120), ibdn(30), FB!(30, 6, 15), Fcr!(30, 4, 15), FT!(120)
      OPEN "I", #2, "disk.dat"
       INPUT #2, pr$
       INPUT #2, dd$
      CLOSE #2
      OPEN "I", #4, "MAIN.DAT"
       INPUT #4, FILE$
       INPUT #4, proj$
       INPUT #4, KEY$
       INPUT #4, eng$
      CLOSE #4
      file3$ = dd$ + ":\multdata\" + FILE$ + ".prn"
      OPEN "I", #2, file3$
540   DIM SCTP$(5)
550   SCTP$(1) = "RECTANGULAR"
560   SCTP$(2) = "TEE SECTION"
570   SCTP$(3) = "III SECTION"
580   SCTP$(4) = "HOLLOW CORE"
590   SCTP$(5) = "BOX SECTION"
      CLS
      LPRINT "     ****************************************************************"
      LPRINT "                       OUTPUT RESULTS OF MULTIBEAM STRUCTURES"
      LPRINT "     DATE     : "; DATE$; : LPRINT "              PROJECT TITLE : "; proj$
      LPRINT "     FILENAME : "; FILE$; : LPRINT "              ENGINEER      : "; eng$
      LPRINT "     ****************************************************************"
      LPRINT
      LPRINT "     STRUCTURE IDENTIFICATION"
       INPUT #2, N
       INPUT #2, NBT
       INPUT #2, SPAN
       INPUT #2, units$(1)
      LPRINT "                NO. OF BEAMS        =", N
      LPRINT "                NO. OF BEAM TYPE    =", NBT
      LPRINT "                SPAN LENGTH         =", SPAN
      LPRINT "                UNIT OF LENGTH      =", units$(1)
      LPRINT
      LPRINT "     BEAM TYPE DISTRIBUTION   ( BEAM NO./BEAM TYPE )"
1060  FOR I = 1 TO N
      IF I = 1 THEN LPRINT ; : LPRINT "            ";
      IF I = 8 THEN LPRINT : LPRINT "            ";
      IF I = 15 THEN LPRINT : LPRINT "            ";
      IF I = 22 THEN LPRINT : LPRINT "            ";
      IF I = 29 THEN LPRINT : LPRINT "            ";
       INPUT #2, ibdn(I)
1070  LPRINT USING "  ##"; I;
      LPRINT "/"; ibdn(I);
1080  NEXT I
      PRINT
      LOCATE 24, 5: INPUT "ENTER TO CONTINUE ---> ", q
      CLS
      FOR I = 1 TO NBT
       INPUT #2, BTYP$(I, 1)
      IF BTYP$(I, 1) = "RECTANGULAR" THEN GOTO 12650
      IF BTYP$(I, 1) = "TEE SECTION" THEN GOTO 12680
      IF BTYP$(I, 1) = "III SECTION" THEN GOTO 12680
      IF BTYP$(I, 1) = "HOLLOW CORE" THEN GOTO 12750
      IF BTYP$(I, 1) = "BOX SECTION" THEN GOTO 12780
12650  INPUT #2, P!(I, 3)
       INPUT #2, P!(I, 4)
       INPUT #2, P!(I, 1)
       INPUT #2, P!(I, 2)
       INPUT #2, EA!(I)
       INPUT #2, YBMI!(I)
       INPUT #2, ZBMI!(I)
       INPUT #2, TBTJ!(I)
       INPUT #2, G!(I)
12670 GOTO 12810
12680  INPUT #2, P!(I, 3)
       INPUT #2, P!(I, 4)
       INPUT #2, P!(I, 1)
       INPUT #2, P!(I, 2)
       INPUT #2, EA!(I)
       INPUT #2, YBMI!(I)
       INPUT #2, ZBMI!(I)
       INPUT #2, TBTJ!(I)
       INPUT #2, G!(I)
       INPUT #2, P!(I, 6)
12690 IF BTYP$(I, 1) = "RECTANGULAR" THEN GOTO 12650
      IF BTYP$(I, 1) = "TEE SECTION" THEN GOTO 12700
      IF BTYP$(I, 1) = "III SECTION" THEN GOTO 12710
12700 PRINT
12705 GOTO 12740
12710  INPUT #2, P!(I, 5)
       INPUT #2, P!(I, 6)
12740 GOTO 12810
12750  INPUT #2, P!(I, 3)
       INPUT #2, P!(I, 4)
       INPUT #2, P!(I, 1)
       INPUT #2, P!(I, 2)
       INPUT #2, EA!(I)
       INPUT #2, YBMI!(I)
       INPUT #2, ZBMI!(I)
       INPUT #2, TBTJ!(I)
       INPUT #2, G!(I)
       INPUT #2, P!(I, 5)
       INPUT #2, P!(I, 6)
       INPUT #2, MM
12770 GOTO 12810
12780  INPUT #2, P!(I, 3)
       INPUT #2, P!(I, 4)
       INPUT #2, P!(I, 1)
       INPUT #2, P!(I, 2)
       INPUT #2, EA!(I)
       INPUT #2, YBMI!(I)
       INPUT #2, ZBMI!(I)
       INPUT #2, TBTJ!(I)
       INPUT #2, G!(I)
       INPUT #2, P!(I, 5)
       INPUT #2, P!(I, 6)
       INPUT #2, MM
12810 NEXT I
2500  REM*************************************************************************
2510  REM                              SUBROUTINE SBOPTP
2520  REM         THIS SUBROUTINE PRINTS CALCULATED PROPERTIES OF BEAM
2530  REM*************************************************************************
2590  FOR I = 1 TO NBT
      CLS
      LPRINT
```

```
      LPRINT "     BEAM TYPE  "; I; "("; BTYPE(I, 1); ")"
      LPRINT "              DIMENSION                 :"
      LPRINT "             (1)     = "; USING "####.###"; P!(I, 3);
      LPRINT "           ;       E-MOD   ="; : LPRINT USING " #.##^^^^", P!(I, 1)
      LPRINT "             (2)     = "; USING "####.###"; P!(I, 4);
      LPRINT "           ;       POIS     ="; P!(I, 2)
      LPRINT "             (3)     = "; USING "####.###"; P!(I, 5);
      LPRINT "           ;       AREA     ="; EA!(I)
      LPRINT "             (4)     = "; USING "####.###"; P!(I, 6);
      LPRINT "           ;       I-Y      ="; YBMI!(I)
      LPRINT "             (5)     = "; USING "####.###"; P!(I, 7);
      LPRINT "           ;       I-Z      ="; ZBMI!(I)
      LPRINT "             (6)     = "; USING "####.###"; P!(I, 8);
      LPRINT "           ;       J        ="; TBI!(I)
      LPRINT "           (BOXES)  =  "; USING "########"; NN;
      LPRINT "           ;       G        ="; G(I)
      LOCATE 24, 5: INPUT "ENTER TO CONTINUE ==> ", q
2810  NEXT I
3000  REM*****************************************************************
3010  REM                            SUBROUTINE  CSIPTS
3020  REM          THIS SUBROUTINE READS AND PRINTS SHEAR KEY PROPERTIES
3030  REM*****************************************************************
      CLS
      LPRINT
      LPRINT "     THREE TYPE SHEAR KEY"
       INPUT #2, KEYES
       INPUT #2, NSKTK
      LPRINT "               NO. OF SHEAR KEY    =", NSKTK
      LPRINT
      LPRINT "     SHEAR KEY TYPE DISTRIBUTION   ( SHEAR KEY NO./SHEAR KEY TYPE )"
      FOR I = 1 TO N - 1
      IF I = 1 THEN LPRINT ; : LPRINT "          ";
      IF I = 8 THEN LPRINT : LPRINT "          ";
      IF I = 15 THEN LPRINT : LPRINT "          ";
      IF I = 22 THEN LPRINT : LPRINT "          ";
      IF I = 29 THEN LPRINT : LPRINT "          ";
       INPUT #2, isdn(I)
      LPRINT USING "  ##"; I;
      LPRINT "/"; isdn(I);
3200  NEXT I
3210  IF NSKTK - 10 <= 0 THEN GOTO 3250
3220  IF NSKTK - 10 > 0 THEN GOTO 3250
3230  GOTO 3620
3250  LPRINT
      LPRINT
      LPRINT "     KEY NO. E-MOD     THK.     BE       VC L.LEVEL R.LEVEL       KX       KO"
      FOR I = 1 TO NSKTK
      LPRINT USING "      ##   "; I;
      FOR j = 1 TO 8
       INPUT #2, s!(I, j)
3270  IF j = 1 OR j = 7 OR j = 8 THEN LPRINT USING " #.#^^^^"; s!(I, j);
      IF j = 2 OR j = 3 OR j = 4 OR j = 5 OR j = 6 THEN LPRINT USING "#####.##"; s!(I, j);
3280  NEXT j
      LPRINT
3620  NEXT I
      LOCATE 24, 4: INPUT " ENTER TO CONTINUE ==> ", q
      CLS
       INPUT #2, lc
       INPUT #2, units$(1)
       INPUT #2, units$(2)
       INPUT #2, NL
       INPUT #2, nhm
       INPUT #2, inc
       INPUT #2, ied
      CLS
      LPRINT
```

```
      LPRINT "     LOAD DATA"
      LPRINT "            UNIT OF FORCES                              = "; units$(2)
      LPRINT "            NUMBER OF LOAD                              = "; NL
      LPRINT "            NUMBER OF HARMONICS                         = "; nhm;
      LPRINT "@", inc
      FOR I = 1 TO NL
      CLS
       INPUT #2, ldn(I)
4310   INPUT #2, r!(I)
       INPUT #2, v!(I)
       INPUT #2, w!(I)
       INPUT #2, c!(I)
       INPUT #2, e!(I)
       INPUT #2, tplds(I, 1)
      LPRINT
      LPRINT "     LOAD ON BEAM NUMBER    = "; ldn(I)
      LPRINT "            LOAD MAGNITUDE OF                           = "; r!(I)
      LPRINT "            WIDTH OF LOAD                               = "; v!(I)
      LPRINT "            LENGTH OF LOAD                              = "; w!(I)
      LPRINT "            LONGITUDINAL POSITION OF LOAD CENTROID = "; c!(I)
      LPRINT "            LOAD ECCENTRICITY                           = "; e!(I)
      LPRINT "            LOAD TYPE                                   = "; tplds(I, 1)
      LOCATE 24, 5: INPUT "ENTER TO CONTINUE ==> ", q
      NEXT I
      CLS
18000 REM*****************************************************************
18020 REM                THIS SUBROUTINE READS ALL THE RESULTS
18030 REM*****************************************************************
18035 REM*****BEAM DISPLACEMENTS*****
       INPUT #2, np
18060 FOR I = 1 TO N STEP 2
18080 FOR k = 1 TO np
18085  INPUT #2, x!(k)
18090 FOR j = 1 TO 4
18100  INPUT #2, rrr!(I, j, k)
18110 NEXT j
18120 NEXT k
18130 IF I - N < 0 THEN GOTO 18150
18140 IF I - N >= 0 THEN GOTO 18240
18150 II = I + 1
18170 FOR k = 1 TO np
18180  INPUT #2, x!(k)
18190 FOR j = 1 TO 4
18200  INPUT #2, rrr!(II, j, k)
18210 NEXT j
18220 NEXT k
18230 NEXT I
18240 REM*****SHEAR KEY DISPLACMENTS*****
18250 IF ied < 0 OR ied > 8 THEN GOTO 18230
18260 IF ied = 8 THEN GOTO 18410
18270 FOR I = 1 TO N - 1
18280 FOR k = 1 TO np
18290  INPUT #2, x!(k)
18300 FOR j = 1 TO 4
18310  INPUT #2, DL!(I, j, k)
18320 NEXT j
18330 NEXT k
18340 FOR k = 1 TO np
18345  INPUT #2, x!(k)
18350 FOR j = 1 TO 4
18360  INPUT #2, DR!(I, j, k)
18370 NEXT j
18380 NEXT k
18390 NEXT I
18400 REM*****BEAM FORCES*****
18410 FOR I = 1 TO N STEP 2
```

```
18430 FOR k = 1 TO np
18440  INPUT #2, x!(k)
18450 FOR j = 1 TO 6
18460  INPUT #2, FB!(I, j, k)
18470 NEXT j
18480 NEXT k
18500 IF I - N < 0 THEN GOTO 18520
18510 IF I - N >= 0 THEN GOTO 18610
18520 II = I + 1
18540 FOR k = 1 TO np
18550  INPUT #2, x!(k)
18560 FOR j = 1 TO 6
18570  INPUT #2, FB!(II, j, k)
18580 NEXT j
18590 NEXT k
18595 NEXT I
18600 REM*****BEAM STRESSES*****
18610 FOR I = 1 TO N
18620 FOR jj = 1 TO 1
18640 I = I + jj - 1
18650 II = ibon(I)
18670 FOR k = 1 TO 4
18680  INPUT #2, TS!(II, k)
18690  INPUT #2, ZS!(II, k)
18700 NEXT k
18710 FOR j = 1 TO np
       INPUT #2, x!(j)
18780 FOR m = 1 TO 4
18800  INPUT #2, bs!(m, j, I)
18810 NEXT m
18820 NEXT j
      IF I - N < 0 THEN GOTO 18830
      IF I - N >= 0 THEN GOTO 18860
18830 NEXT jj
18840 NEXT I
18850 REM*****SHEAR KEY FORCES*****
18860 FOR I = 1 TO N - 1 STEP 2
18880 FOR k = 1 TO np
18890  INPUT #2, x!(k)
18900 FOR j = 1 TO 4
18910  INPUT #2, FS(I, j, k)
18920 NEXT j
18930 NEXT k
18940 IF I - N + 1 < 0 THEN GOTO 18960
18950 IF I - N + 1 >= 0 THEN GOTO 19040
18960 II = I + 1
18980 FOR k = 1 TO np
18990 FOR j = 1 TO 4
19000  INPUT #2, FS!(II, j, k)
19010 NEXT j
19020 NEXT k
19030 NEXT I
19040 CLOSE #2
10010 CLS
10020 GOSUB 10500
10180 LOCATE 9, 29: PRINT "   "; N; "BEAMS  "; N - 1; "KEYS   "
10190 LOCATE 11, 37: PRINT "< 1 >   BEAM DISPLACEMENTS"
10200 LOCATE 12, 37: PRINT "< 2 >   SHEAR KEY DISPLACMENTS"
10210 LOCATE 13, 37: PRINT "< 3 >   BEAM FORCES"
10220 LOCATE 14, 37: PRINT "< 4 >   BEAM STRESS"
10230 LOCATE 15, 37: PRINT "< 5 >   SHEAR KEY FORCES"
10240 LOCATE 16, 37: PRINT "< 0 >   EXIT TO MAIN LINE"
10250 LOCATE 21, 13: PRINT "ENTER YOUR SELECTION ===> ";
10260 LOCATE 21, 40: INPUT Z
      IF Z = 0 THEN END
      IF Z < 1 OR Z > 5 THEN GOTO 10010
      LOCATE 23, 13: PRINT "BEAM OR SHEAR KEY NO.===> ";
      LOCATE 23, 40: INPUT I
      IF I < 0 OR I > N THEN GOTO 10010
10370 IF Z = 0 THEN END
10380 IF Z < 1 OR Z > 5 THEN GOTO 10350
10390 ON Z GOTO 10300, 10310, 10320, 10330, 10340
10300 GOSUB 8050: GOTO 10010
10310 GOSUB 8240: GOTO 10010
10320 GOSUB 8400: GOTO 10010
10330 GOSUB 8600: GOTO 10010
10340 GOSUB 8850: GOTO 10010
10500 REM HEAD OF FILE
10510 LOCATE 3, 33: PRINT ""
      LOCATE 5, 31: PRINT "M U L T I B E A M"
10520 LOCATE 7, 22: PRINT "K E O N K A E N   U N I V E R S I T Y"
10530 LOCATE 9, 13: PRINT "*************************************************************"
10540 LOCATE 11, 13: PRINT "SELECT NEXT ACTION"
10550 LOCATE 20, 13: PRINT "*************************************************************"
10560 RETURN

8000  REM*********************************************************************
8010  REM          SUBROUTINE COUTPS
8020  REM THIS SUBROUTINE PRINTS ALL THE RESULTS
8030  REM*********************************************************************
8050  REM*****BEAM DISPLACEMENTS*****
      CLS
      LPRINT "                    ****** DISPLACEMENTS OF BEAMS AT C.G.  ******"
8070  LPRINT "                                          BEAM No.="; I
      LPRINT "  AT POINT      LONGITUDINAL        HORIZONTAL          VERTICAL          ROTATION"
8080  FOR k = 1 TO np
8085  LPRINT USING "    #.###"; x!(k); : LPRINT "L";
8100  LPRINT USING "       ##.###^^^^"; rrr!(I, 1, k);
      LPRINT USING "       ##.###^^^^"; rrr!(I, 2, k);
      LPRINT USING "       ##.###^^^^"; rrr!(I, 3, k);
      LPRINT USING "       ##.###^^^^"; rrr!(I, 4, k)
8120  NEXT k
      GOSUB 9050
      RETURN
8240  REM*** **SHEAR KEY DISPLACMENTS*****
      CLS
      IF ind = 0 THEN RETURN
      LPRINT "                    ******  DISPLACEMENT OF THE JOINTS     ******"
      LPRINT "                                     LEFT SHEAR KEY NO. "; I
      LPRINT "  AT POINT      LONGITUDINAL       HORIZONTAL          VERTICAL          ROTATION"
8250  IF ind < 0 OR ind > 1 THEN GOTO 8280
8260  IF ind = 0 THEN RETURN
8280  FOR k = 1 TO np
8290  LPRINT USING "    #.###"; x!(k); : LPRINT "L";
8310  LPRINT USING "       ##.###^^^^"; DL!(I, 1, k);
      LPRINT USING "       ##.###^^^^"; DL!(I, 2, k);
      LPRINT USING "       ##.###^^^^"; DL!(I, 3, k);
      LPRINT USING "       ##.###^^^^"; DL!(I, 4, k)
8330  NEXT k
      GOSUB 9050
      CLS
      LPRINT "                    ******  DISPLACEMENT OF THE JOINTS   ******"
      LPRINT "                                     RIGHT SHEAR KEY NO. "; I
      LPRINT "  AT POINT      LONGITUDINAL       HORIZONTAL          VERTICAL          ROTATION"
      FOR k = 1 TO np
      LPRINT USING "    #.###"; x!(k); : LPRINT "L";
      LPRINT USING "      -##.###^^^^"; DR!(I, 1, k);
      LPRINT USING "       ##.###^^^^"; DR!(I, 2, k);
      LPRINT USING "       ##.###^^^^"; DR!(I, 3, k);
      LPRINT USING "       ##.###^^^^"; DR!(I, 4, k)
      NEXT k
      GOSUB 9050
```

```
      RETURN
8400  REM*****BEAM FORCES*****
8410  CLS
      LPRINT "                    ******            BEAM FORCES            ******"
8420  LPRINT "                                      BEAM No.="; I
      LPRINT " AT POINT  LONGITUDINAL  HORIZONTAL   VERTICAL    TORSION       M-ZZ       M-YY"
8430  FOR k = 1 TO np
8440  LPRINT USING "   #.###  "; x1(k); : LPRINT "L";
8450  LPRINT USING "     ##.###^^^^"; FB1(I, 1, k);
      LPRINT USING "     ##.###^^^^"; FB1(I, 2, k);
      LPRINT USING "     ##.###^^^^"; FB1(I, 3, k);
      LPRINT USING "     ##.###^^^^"; FB1(I, 4, k);
      LPRINT USING "     ##.###^^^^"; FB1(I, 5, k);
      LPRINT USING "     ##.###^^^^"; FB1(I, 6, k)
8480  NEXT k
      GOSUB 9050
      RETURN
8500  REM*****BEAM STRESSES*****
      CLS
8520  LPRINT "                    ******   FIBER STRESS OF BEAM   ******"
8530  FOR jj = 1 TO 3
8540  I = I + jj - 1
8550  II = Ibdm(I)
8560  LPRINT "                                      BEAM No."; I
      LPRINT "  AT POINT  ";
8570  FOR k = 1 TO 4
8580  LPRINT USING "    ###.##"; YY1(II, k);
8590  LPRINT USING " ###.## "; ZZ1(II, k);
8700  NEXT k
      LPRINT
8710  FOR j = 1 TO np
8720  LPRINT USING "    #.###"; x2(j); : LPRINT "L";
8730  LPRINT USING "       ##.###^^^^"; bex(I, j, 1);
      LPRINT USING "       ##.###^^^^"; bex(I, j, 2);
      LPRINT USING "       ##.###^^^^"; bex(I, j, 3);
      LPRINT USING "       ##.###^^^^"; bex(I, j, 4)
8820  NEXT j
8830  NEXT jj
      GOSUB 9050
      RETURN
8850  REM*****SHEAR KEY FORCES*****
      CLS
8870  LPRINT "                    ******  INTERNAL FORCES OF SHEAR KEY   ******"
      LPRINT "                                      SHEAR KEYS NO. "; I
      LPRINT "  AT POINT     LONGITUDINAL     HORIZONTAL       VERTICAL       ROTATION"
8880  FOR k = 1 TO np
8890  LPRINT USING "    #.###"; x3(k); : LPRINT "L  ";
8910  LPRINT USING "     ##.###^^^^"; FS1(I, 1, k);
      LPRINT USING "     ##.###^^^^"; FS1(I, 2, k);
      LPRINT USING "     ##.###^^^^"; FS1(I, 3, k);
      LPRINT USING "     ##.###^^^^"; FS1(I, 4, k)
8930  NEXT k
      GOSUB 9050
9040  RETURN
9050  LPRINT "*****************************************************************"
      LPRINT
      RETURN
```

```
REM*****************************************************************
REM                        SCREEN.BAS
REM                THIS FILE IS USED FOR SELECTING
REM        THE THEORY FOR PRINTING THE RESULT ON MONITER
REM*****************************************************************
OPEN "I", #2, "d:dd.dat"
 INPUT #2, Pr$
 INPUT #2, ds$
CLOSE #2
OPEN "I", #4, "KARN.DAT"
 INPUT #4, file$
 INPUT #4, pro$
 INPUT #4, KEY$
 INPUT #4, msg$
CLOSE #4
IF KEY$ = "SPRING TYPE" THEN A$ = Pr$ + ":\MULTPRO\SPRINGS.EXE"
IF KEY$ = "PLATE TYPE" THEN A$ = Pr$ + ":\MULTPRO\PLATES.EXE"
IF KEY$ = "TRUSS TYPE" THEN A$ = Pr$ + ":\MULTPRO\TRUSSES.EXE"
SHELL A$
END
```

```
10    REM*************************************************************************
20    REM                               SPRINGS.BAS
30    REM      THIS PROGRAM ENABLES THE ANALYSIS OF SIMPLY SUPPORTED MULTIBEAM
40    REM        STRUCTURES WITH SPRING TYPE SHEAR KEYS PRINT DATA ON SCREEN
100   REM*************************************************************************
      CLS
      '$DYNAMIC
      DIM TITLE$(10), NEQ(40)
      DIM units$(2), NSETS, lnd, ABENI(15), ACOSI(15), TI(15)
      DIM P!(10, 6), EAI(10), YBMI!(10), ZBMI!(10), TBTJ!(10), G!(10), BTYPE$(10, 1)
      DIM S!(10, 5), YY!(10, 4), ZZ!(10, 4), W!(28, 14), A!(10, 4), bet(4, 15, 30)
      DIM r!(15), v!(15), w!(15), e!(15), s!(15), tpidm(15, 2), ldn(15), x!(15)
      DIM D!(29, 6), QE!(29, 4, 15), DR!(29, 4, 15), FE!(29, 4, 15), iedn(29)
      DIM SE!(120, 40), RB!(120), ibdn(30), FB!(30, 6, 15), err!(30, 4, 15), F!(120)
      OPEN "I", #2, "disk.dat"
       INPUT #2, PR$
       INPUT #2, DA$
      CLOSE #2
      OPEN "I", #4, "LAIN.DAT"
       INPUT #4, FILE$
       INPUT #4, prmd
       INPUT #4, LETA$
       INPUT #4, engd
      CLOSE #4
      file1$ = DA$ + ":\MULTDATA\" + FILE$ + ".PRN"
      OPEN "I", #2, file1$
340   DIM SCTP$(5)
550   SCTP$(1) = "RECTANGULAR"
560   SCTP$(2) = "TEE SECTION"
570   SCTP$(3) = "III SECTION"
580   SCTP$(4) = "HOLLOW CORE"
590   SCTP$(5) = "BOX SECTION"
      CLS
      PRINT "      ****************************************************************"
      PRINT "                          ANALYSIS MULTIBEAM STRUCTURES"
      PRINT "      ****************************************************************"
      PRINT "      STRUCTURE IDENTIFICATION"
       INPUT #2, N
       INPUT #2, NBT
       INPUT #2, SPAN
       INPUT #2, units$(1)
      PRINT "      NO. OF BEAMS        =", N
      PRINT "      NO. OF BEAM TYPE    =", NBT
      PRINT "      SPAN LENGTH         =", SPAN
      PRINT "      UNIT OF LENGTH      =", units$(1)
      PRINT "      BEAM TYPE DISTRIBUTION   ( BEAM NO./BEAM TYPE )"
1060  FOR I = 1 TO N
      IF I = 1 THEN PRINT : : PRINT "              ";
      IF I = 8 THEN PRINT : PRINT "             ";
      IF I = 15 THEN PRINT : PRINT "             ";
      IF I = 22 THEN PRINT : PRINT "             ";
      IF I = 29 THEN PRINT : PRINT "             ";
       INPUT #2, ibdn(I)
1070  PRINT USING "  ##"; I;
      PRINT "/"; ibdn(I);
1080  NEXT I
      PRINT
      LOCATE 23, 5: PRINT "****************************************************************"
      LOCATE 24, 5: INPUT "ENTER TO CONTINUE ---> ", Q
      CLS
      FOR I = 1 TO NBT
       INPUT #2, BTYPE$(I, 1)
      IF BTYPE$(I, 1) = "RECTANGULAR" THEN GOTO 12650
      IF BTYPE$(I, 1) = "TEE SECTION" THEN GOTO 12680
      IF BTYPE$(I, 1) = "III SECTION" THEN GOTO 12680
      IF BTYPE$(I, 1) = "HOLLOW CORE" THEN GOTO 12750
      IF BTYPE$(I, 1) = "BOX SECTION" THEN GOTO 12780
12650 INPUT #2, P!(I, 3)
      INPUT #2, P!(I, 4)
      INPUT #2, P!(I, 1)
      INPUT #2, P!(I, 2)
      INPUT #2, EA!(I)
      INPUT #2, YBMI!(I)
      INPUT #2, ZBMI!(I)
      INPUT #2, TBTJ!(I)
      INPUT #2, G!(I)
12670 GOTO 12810
12680 INPUT #2, P!(I, 3)
      INPUT #2, P!(I, 4)
      INPUT #2, P!(I, 1)
      INPUT #2, P!(I, 2)
      INPUT #2, EA!(I)
      INPUT #2, YBMI!(I)
      INPUT #2, ZBMI!(I)
      INPUT #2, TBTJ!(I)
      INPUT #2, G!(I)
      INPUT #2, P!(I, 6)
12690 IF BTYPE$(I, 1) = "RECTANGULAR" THEN GOTO 12650
      IF BTYPE$(I, 1) = "TEE SECTION" THEN GOTO 12700
      IF BTYPE$(I, 1) = "III SECTION" THEN GOTO 12710
12700 PRINT
12705 GOTO 12740
12710 INPUT #2, P!(I, 5)
      INPUT #2, P!(I, 6)
12740 GOTO 12810
12750 INPUT #2, P!(I, 3)
      INPUT #2, P!(I, 4)
      INPUT #2, P!(I, 1)
      INPUT #2, P!(I, 2)
      INPUT #2, EA!(I)
      INPUT #2, YBMI!(I)
      INPUT #2, ZBMI!(I)
      INPUT #2, TBTJ!(I)
      INPUT #2, G!(I)
      INPUT #2, P!(I, 5)
      INPUT #2, P!(I, 6)
      INPUT #2, MM
12770 GOTO 12810
12780 INPUT #2, P!(I, 3)
      INPUT #2, P!(I, 4)
      INPUT #2, P!(I, 1)
      INPUT #2, P!(I, 2)
      INPUT #2, EA!(I)
      INPUT #2, YBMI!(I)
      INPUT #2, ZBMI!(I)
      INPUT #2, TBTJ!(I)
      INPUT #2, G!(I)
      INPUT #2, P!(I, 5)
      INPUT #2, P!(I, 6)
      INPUT #2, MM
12810 NEXT I

2500  REM*************************************************************************
2510  REM                          SUBROUTINE CBOPTP
2520  REM          THIS SUBROUTINE PRINTS CALCULATED PROPERTIES OF BEAM
2530  REM*************************************************************************
2590  FOR I = 1 TO NBT
      CLS
      PRINT "      ****************************************************************"
      PRINT "                          ANALYSIS MULTIBEAM STRUCTURES"
      PRINT "      ****************************************************************"
```

```
     PRINT "     BEAM TYPE   "; I; "("; BTYPE(I, 1); ")"
     PRINT "     DIMENSION              :"
     PRINT "     (1)  =   "; USING "####.###"; P(I, 3);
     PRINT "     :       E-MOD   ="; P(I, 1)
     PRINT "     (2)  =   "; USING "####.###"; P(I, 4);
     PRINT "     :       POIS    ="; P(I, 2)
     PRINT "     (3)  =   "; USING "####.###"; P(I, 5);
     PRINT "     :       AREA    ="; SA(I)
     PRINT "     (4)  =   "; USING "####.###"; P(I, 6);
     PRINT "     :       I-Y     ="; YBAR(I)
     PRINT "     (5)  =   "; USING "####.###"; P(I, 7);
     PRINT "     :       I-Z     ="; ZBAR(I)
     PRINT "     (6)  =   "; USING "####.###"; P(I, 8);
     PRINT "     :       J       ="; TBS(I)
     PRINT "     (BOXES) =   "; USING "########"; NB;
     PRINT "     :       G       ="; G(I)
     LOCATE 23, 5: PRINT "****************************************************************"
     LOCATE 24, 5: INPUT "ENTER TO CONTINUE ===> ", Q
3410 NEXT I
3000 REM*********************************************************************
3020 REM             THIS SUBROUTINE AND PRINTS SHEAR KEY PROPERTIES
3030 REM*********************************************************************
     CLS
     PRINT "     ***************************************************************"
     PRINT "                        ANALYSIS MULTIBEAM STRUCTURES"
     PRINT "     ***************************************************************"
      INPUT #2, KEYSI
      INPUT #2, NSKTR
     PRINT "   NO. OF SHEAR KEY   =", NSKTR
     PRINT "   SHEAR KEY TYPE DISTRIBUTION   ( SHEAR KEY NO./SHEAR KEY TYPE )"
     FOR I = 1 TO N - 1
     IF I = 1 THEN PRINT ; : PRINT "       ";
     IF I = 8 THEN PRINT : PRINT "        ";
     IF I = 15 THEN PRINT : PRINT "       ";
     IF I = 22 THEN PRINT : PRINT "       ";
     IF I = 29 THEN PRINT : PRINT "       ";
      INPUT #2, isdn(I)
     PRINT USING "  ##"; I;
     PRINT "/"; isdn(I);
3200 NEXT I
3210 IF NSKTR - 10 <= 0 THEN GOTO 3250
3220 IF NSKTR - 10 > 0 THEN GOTO 3250
3230 GOTO 3630
3250 PRINT "   KEY NO.       X          Y          Z          Q   L.LEVE  R.LEVEL"
     FOR I = 1 TO NSKTR
     PRINT USING "  ##   "; I;
     FOR J = 1 TO 6
      INPUT #2, S(I, J)
     NEXT J
3270 PRINT USING "  #.###^^^^"; S(I, 1);
     PRINT USING "  #.###^^^^"; S(I, 2);
     PRINT USING "  #.###^^^^"; S(I, 3);
     PRINT USING "  #.###^^^^"; S(I, 4);
     PRINT USING "  ####.###"; S(I, 5);
     PRINT USING "  ####.###"; S(I, 6)
3620 NEXT I
     LOCATE 23, 5: PRINT "***************************************************************"
     LOCATE 24, 4: INPUT " ENTER TO CONTINUE ===> ", Q
     CLS
      INPUT #2, lc
      INPUT #2, units$(1)
      INPUT #2, units$(2)
      INPUT #2, nl
      INPUT #2, nhm
      INPUT #2, inc
```

```
      INPUT #2, iod
     FOR L = 1 TO nl
     CLS
     PRINT "     ****************************************************************"
     PRINT "                         ANALYSIS MULTIBEAM STRUCTURES"
     PRINT "     ****************************************************************"
     PRINT "     UNIT OF FORCES                  =  "; units$(1)
     PRINT "     NUMBER OF LOAD                  = "; nl
     PRINT "     NUMBER OF HARMONICS             = "; nhm;
      INPUT #2, ldn(L)
4320 INPUT #2, r(L)
     INPUT #2, v(L)
     INPUT #2, w(L)
     INPUT #2, c(L)
     INPUT #2, e(L)
     INPUT #2, tpld$(L, 1)
     PRINT "     LOAD ON BEAM NUMBER    = "; ldn(L)
     PRINT "     LOAD MAGNITUDE OF                           = "; r(L)
     PRINT "     WIDTH OF LOAD                               = "; v(L)
     PRINT "     LENGTH OF LOAD                              = "; w(L)
     PRINT "     LONGITUDINAL POSITION OF LOAD CENTROID = "; c(L)
     PRINT "     LOAD ECCENTRICITY                           = "; e(L)
     PRINT "     LOAD TYPE                                   =  "; tpld$(L, 1)
     LOCATE 23, 5: PRINT "****************************************************************"
     LOCATE 24, 5: INPUT "ENTER TO CONTINUE ===> ", Q
     NEXT
     CLS
18000 REM********************************************************************
18020 REM                    THIS SUBROUTINE READS ALL THE RESULTS
18030 REM********************************************************************
18050 REM*****BEAM DISPLACEMENTS*********************
      INPUT #2, np
18060 FOR I = 1 TO N STEP 2
18080 FOR K = 1 TO np
18085 INPUT #2, x(K)
18090 FOR J = 1 TO 4
18100 INPUT #2, rrr(I, J, K)
18110 NEXT J
18120 NEXT K
18130 IF I - N < 0 THEN GOTO 18150
18140 IF I - N >= 0 THEN GOTO 18240
18150 I1 = I + 1
18170 FOR K = 1 TO np
18180 INPUT #2, x(K)
18190 FOR J = 1 TO 4
18200 INPUT #2, rrr(I1, J, K)
18210 NEXT J
18220 NEXT K
18230 NEXT I
18240 REM*****SHEAR KEY DISPLACMENTS*****************
18250 IF iod < 0 OR iod > 0 THEN GOTO 18270
18260 IF iod = 0 THEN GOTO 18410
18270 FOR I = 1 TO N - 1
18280 FOR K = 1 TO np
18290 INPUT #2, x(K)
18300 FOR J = 1 TO 4
18310 INPUT #2, DL(I, J, K)
18320 NEXT J
18330 NEXT K
18340 FOR K = 1 TO np
18345 INPUT #2, x(K)
18350 FOR J = 1 TO 4
18360 INPUT #2, DR(I, J, K)
18370 NEXT J
18380 NEXT K
18390 NEXT I
```

```
18400 REM****BEAM FORCES********************************
18410 FOR I = 1 TO N STEP 1
18430 FOR k = 1 TO np
18440 INPUT #2, x!(k)
18450 FOR J = 1 TO 6
18460 INPUT #2, FB!(I, J, k)
18470 NEXT J
18480 NEXT k
18500 IF I - N < 0 THEN GOTO 18520
18510 IF I - N >= 0 THEN GOTO 18610
18520 II = I + 1
18540 FOR k = 1 TO np
18550 INPUT #2, x!(k)
18560 FOR J = 1 TO 6
18570 INPUT #2, FB!(II, J, k)
18580 NEXT J
18590 NEXT k
18595 NEXT I
18600 REM*****BEAM STRESSES*****************************
18610 FOR I = 1 TO N
18630 FOR jj = 1 TO 2
18640 I = I + jj - 1
18650 II = ibon(I)
18670 FOR k = 1 TO 4
18680 INPUT #2, YY!(II, k)
18690 INPUT #2, ZZ!(II, k)
18700 NEXT k
18710 FOR J = 1 TO np
      INPUT #2, x1(J)
18780 FOR m = 1 TO 4
18800 INPUT #2, bsx!(m, J, I)
18810 NEXT m
18820 NEXT J
      IF I - N < 0 THEN GOTO 18830
      IF I - N >= 0 THEN GOTO 18860
18830 NEXT jj
18840 NEXT I
18850 REM*****SHEAR KEY FORCES*************************
18860 FOR I = 1 TO N - 1 STEP 2
18880 FOR k = 1 TO np
18890 INPUT #2, x!(k)
18900 FOR J = 1 TO 4
18910 INPUT #2, FK(I, J, k)
18920 NEXT J
18930 NEXT k
18940 IF I - N + 1 < 0 THEN GOTO 18960
18950 IF I - N + 1 >= 0 THEN GOTO 19040
18960 II = I + 1
18980 FOR k = 1 TO np
18990 FOR J = 1 TO 4
19000 INPUT #2, FK!(II, J, k)
19010 NEXT J
19020 NEXT k
19030 NEXT I
19040 CLOSE #2
10010 CLS
10020 GOSUB 10500
10180 LOCATE 9, 29: PRINT "  "; N; "BEAMS  "; N - 1; "KEYS  "
10190 LOCATE 11, 37: PRINT "< 1 >   BEAM DISPLACEMENTS"
10200 LOCATE 12, 37: PRINT "< 2 >   SHEAR KEY DISPLACEMENTS "
10210 LOCATE 13, 37: PRINT "< 3 >   BEAM FORCES"
10220 LOCATE 14, 37: PRINT "< 4 >   BEAM STRESS "
10230 LOCATE 15, 37: PRINT "< 5 >   SHEAR KEY FORCES"
10240 LOCATE 18, 37: PRINT "< 0 >   EXIT TO MAIN LINE"
10250 LOCATE 21, 15: PRINT "ENTER YOUR SELECTION ===> ";
10260 LOCATE 21, 40: INPUT Z
      IF Z = 0 THEN END
      IF Z < 1 OR Z > 5 THEN GOTO 10010
      LOCATE 22, 15: PRINT "BEAM OR SHEAR KEY NO.===> ";
      LOCATE 22, 40: INPUT I
      IF I < 0 OR I > N THEN GOTO 10010
      IF Z = 2 AND I > N - 1 THEN GOTO 10010
      IF Z = 5 AND I > N - 1 THEN GOTO 10010
10270 IF Z = 0 THEN END
10280 IF Z < 1 OR Z > 5 THEN GOTO 10250
10290 ON Z GOTO 10300, 10310, 10320, 10330, 10340
10300 GOSUB 8050: GOTO 10010
10310 GOSUB 8240: GOTO 10010
10320 GOSUB 8400: GOTO 10010
10330 GOSUB 8480: GOTO 10010
10340 GOSUB 8650: GOTO 10010
10500 REM HEAD OF FILE
10510 LOCATE 3, 13: PRINT ""
      LOCATE 5, 31: PRINT "M U L T I B E A M"
10520 LOCATE 7, 23: PRINT "K O D N K A I N   U N I V E R S I T Y"
10530 LOCATE 9, 13: PRINT "*****************************************************"
10540 LOCATE 11, 13: PRINT "SELECT NEXT ACTION"
10550 LOCATE 20, 13: PRINT "*****************************************************"
10560 RETURN


8000 REM***************************************************************
8020 REM                THIS SUBROUTINE PRINTS ALL THE RESULTS
8030 REM***************************************************************
8050 CLS
     PRINT "****** DISPLACEMENTS OF BEAMS AT C.G.  ******"
     PRINT "  BEAM No.="; I
     PRINT "  AT POINT      LONGITUDINAL      HORIZONTAL         VERTICAL         ROTATION"
     PRINT
8060 FOR k = 1 TO np
8065 PRINT USING "    #.###"; x1(k); : PRINT "L";
8100 PRINT USING "    ##.###^^^^"; rrr!(I, 1, k);
     PRINT USING "    ##.###^^^^"; rrr!(I, 2, k);
     PRINT USING "    ##.###^^^^"; rrr!(I, 3, k);
     PRINT USING "    ##.###^^^^"; rrr!(I, 4, k);
     PRINT
8120 NEXT k
     GOSUB 9030
     RETURN
8240 REM******SHEAR KEY DISPLACMENTS*****************
     CLS
     PRINT "   ******DISPLACEMENT OF THE JOINTS******"
     PRINT "   LEFT SHEAR KEY NO. "; I
     PRINT "   AT POINT      LONGITUDINAL      HORIZONTAL         VERTICAL         ROTATION"
     PRINT
8250 IF Ind < 0 OR Ind > 0 THEN GOTO 8280
8260 IF Ind = 0 THEN RETURN
8280 FOR k = 1 TO np
8290 PRINT USING "    #.###"; x1(k); : PRINT "L";
8310 PRINT USING "    ##.###^^^^"; DL!(I, 1, k);
     PRINT USING "    ##.###^^^^"; DL!(I, 2, k);
     PRINT USING "    ##.###^^^^"; DL!(I, 3, k);
     PRINT USING "    ##.###^^^^"; DL!(I, 4, k);
     PRINT
8330 NEXT k
     GOSUB 9030
     CLS
     PRINT "  ****** DISPLACEMENT OF THE JOINTS ******"
     PRINT "  RIGHT SHEAR KEY NO. "; I
     PRINT "  AT POINT      LONGITUDINAL      HORIZONTAL         VERTICAL         ROTATION"
     PRINT
     FOR k = 1 TO np
```

```
     PRINT USING "   #.###"; X!(k); : PRINT "L";
     PRINT USING "   ##.###^^^^"; DR!(I, 1, k);
     PRINT USING "   ##.###^^^^"; DR!(I, 2, k);
     PRINT USING "   ##.###^^^^"; DR!(I, 3, k);
     PRINT USING "   ##.###^^^^"; DR!(I, 4, k);
     PRINT
     NEXT k
     GOSUB 9050
     RETURN
3400 REM*****BEAM FORCES*****************************
3410 CLS
3420 PRINT " ******      BEAM FORCES     ******"
     PRINT " BEAM No.=", I
     PRINT " AT POINT  LONGITUDINAL  HORIZONTAL   VERTICAL    TORSION       M-ZZ        M-YY"
     PRINT
3430 FOR k = 1 TO np
3440 PRINT USING "   #.### "; X!(k); : PRINT "L";
3460 PRINT USING "   ##.###^^^^"; FB!(I, 1, k);
     PRINT USING "   ##.###^^^^"; FB!(I, 2, k);
     PRINT USING "   ##.###^^^^"; FB!(I, 3, k);
     PRINT USING "   ##.###^^^^"; FB!(I, 4, k);
     PRINT USING "   ##.###^^^^"; FB!(I, 5, k);
     PRINT USING "   ##.###^^^^"; FB!(I, 6, k);
     PRINT
3480 NEXT k
     GOSUB 9050
     RETURN
3600 REM*****BEAM STRESSES*****************************
3620 CLS
     PRINT "******   FIBER STRESS OF BEAM   ******"
3630 FOR jj = 1 TO 1
3640 i = I + jj - 1
3650 ii = ibdm(i)
3660 PRINT "  BEAM No."; I
     PRINT "  AT POINT  ";
3670 FOR k = 1 TO 4
3680 PRINT USING "   ###.##"; YY!(II, k);
3690 PRINT USING "   ###.## "; ZZ!(II, k);
3700 NEXT k
     PRINT
     PRINT
3710 FOR I = 1 TO np
3790 PRINT USING "   #.###"; X!(I); : PRINT "L";
3800 PRINT USING "   ##.###^^^^"; bm!(1, J, I);
     PRINT USING "   ##.###^^^^"; bm!(2, J, I);
     PRINT USING "   ##.###^^^^"; bm!(3, J, I);
     PRINT USING "   ##.###^^^^"; bm!(4, J, I);
     PRINT
3820 NEXT I
3830 NEXT jj
     GOSUB 9050
     RETURN
3850 REM*****SHEAR KEY FORCES*************************
3875 CLS
     PRINT "  ******  INTERNAL FORCES OF SHEAR KEY  ******"
     PRINT "  SHEAR KEYS NO. "; I
     PRINT "  AT POINT     LONGITUDINAL     HORIZONTAL       VERTICAL       ROTATION"
     PRINT
3880 FOR k = 1 TO np
3890 PRINT USING "   #.###"; X!(k); : PRINT "L  ";
3910 PRINT USING "   ##.###^^^^"; FS!(I, 1, k);
     PRINT USING "   ##.###^^^^"; FS!(I, 2, k);
     PRINT USING "   ##.###^^^^"; FS!(I, 3, k);
     PRINT USING "   ##.###^^^^"; FS!(I, 4, k);
     PRINT
3930 NEXT k
     GOSUB 9050
9040 RETURN
9050 LOCATE 3, 5: PRINT "-----------------------------------------------------------"
     LOCATE 21, 5: PRINT "-----------------------------------------------------------"
     LOCATE 24, 5: INPUT "ENTER TO CONTINUE ==> ", Q
     RETURN
```

```
10    REM****************************************************************
20    REM                          PLATES.BAS
30    REM THIS PROGRAM ENABLES THE ANALYSIS OF SIMPLE SUPPORTED MULTIBEAM
40    REM    STRUCTURES WITH PLANT TYPE SHEAR KEYS PRINT DATA ON SCREEN
100   REM****************************************************************
      CLS
      'SDYNAMIC
      DIM TITLE$(16), NEQ(40)
      DIM units$(2), NEKTB, lam, AGINT!(15), ACOS!(15), T!(15)
      DIM P!(10, 6), SA!(10), YBMI!(10), ZBMI!(10), TBTJ!(10), G!(10), BTYP$(10, 2)
      DIM E!(10, 6), YY!(10, 4), ZZ!(10, 4), K!(29, 24), B!(10, 4), bm(4, 15, 30)
      DIM x!(18), v!(15), w!(15), c!(15), m!(15), tplas(15, 3), ldn(15), X!(15)
      DIM D!(29, 5), DL!(29, 4, 15), DR!(29, 4, 15), FSL!(29, 4, 15), FSR!(29, 4, 15), iadn(29)
      DIM EK!(120, 40), RHI(120), ibdn(30), FB!(30, 6, 15), rrr!(30, 4, 15), F!(120)
      OPEN "I", #3, "disk.dat"
       INPUT #3, PRS
       INPUT #3, DA$
      CLOSE #3
      OPEN "I", #4, "LAEN.DAT"
       INPUT #4, FILE$
       INPUT #4, prot
       INPUT #4, XEYS$
       INPUT #4, angl
      CLOSE #4
      FILE$1 = DA$ + ":\MULTDATA\" + FILE$ + ".PRN"
      OPEN "I", #2, FILE$1
540   DIM SCTP$(5)
550   SCTP$(1) = "RECTANGULAR"
560   SCTP$(2) = "TEE SECTION"
570   SCTP$(3) = "III SECTION"
580   SCTP$(4) = "HOLLOW CORE"
590   SCTP$(5) = "BOX SECTION"
      CLS
      PRINT "     ****************************************************************"
      PRINT "                          ANALYSIS MULTIBEAM STRUCTURES"
      PRINT "     ****************************************************************"
      PRINT "     STRUCTURE IDENTIFICATION"
       INPUT #2, N
       INPUT #2, NBT
       INPUT #2, SPAN
       INPUT #2, units$(1)
      PRINT "               NO. OF BEAMS        =", N
      PRINT "               NO. OF BEAM TYPE    =", NBT
      PRINT "               SPAN LENGTH         =", SPAN
      PRINT "               UNIT OF LENGTH      =", units$(1)
      PRINT "     BEAM TYPE DISTRIBUTION   ( BEAM NO./BEAM TYPE )"
1060  FOR I = 1 TO N
      IF I = 1 THEN PRINT : : PRINT "            ";
      IF I = 8 THEN PRINT : PRINT "           ";
      IF I = 15 THEN PRINT : PRINT "            ";
      IF I = 22 THEN PRINT : PRINT "            ";
      IF I = 29 THEN PRINT : PRINT "            ";
       INPUT #2, ibdn(I)
1070  PRINT USING "  ##"; I;
      PRINT "/"; ibdn(I);
1080  NEXT I
      PRINT
      LOCATE 23, 5: PRINT "****************************************************************"
      LOCATE 24, 5: INPUT "ENTER TO CONTINUE ===> ", Q
      CLS
      FOR I = 1 TO NBT
       INPUT #2, BTYP$(I, 1)
      IF BTYP$(I, 1) = "RECTANGULAR" THEN GOTO 12650
      IF BTYP$(I, 1) = "TEE SECTION" THEN GOTO 12680
      IF BTYP$(I, 1) = "III SECTION" THEN GOTO 12680
      IF BTYP$(I, 1) = "HOLLOW CORE" THEN GOTO 12750
      IF BTYP$(I, 1) = "BOX SECTION" THEN GOTO 12750
12650  INPUT #2, P!(I, 3)
       INPUT #2, P!(I, 4)
       INPUT #2, P!(I, 1)
       INPUT #2, P!(I, 2)
       INPUT #2, SA!(I)
       INPUT #2, YBMI!(I)
       INPUT #2, ZBMI!(I)
       INPUT #2, TBTJ!(I)
       INPUT #2, G!(I)
12670 GOTO 12810
12680  INPUT #2, P!(I, 3)
       INPUT #2, P!(I, 4)
       INPUT #2, P!(I, 1)
       INPUT #2, P!(I, 2)
       INPUT #2, SA!(I)
       INPUT #2, YBMI!(I)
       INPUT #2, ZBMI!(I)
       INPUT #2, TBTJ!(I)
       INPUT #2, G!(I)
       INPUT #2, P!(I, 6)
12690 IF BTYP$(I, 1) = "RECTANGULAR" THEN GOTO 12650
      IF BTYP$(I, 1) = "TEE-SECTION" THEN GOTO 12700
      IF BTYP$(I, 1) = "III-SECTION" THEN GOTO 12710
12700 PRINT
12705 GOTO 12740
12710  INPUT #2, P!(I, 5)
       INPUT #2, P!(I, 6)
12740 GOTO 12810
12750  INPUT #2, P!(I, 3)
       INPUT #2, P!(I, 4)
       INPUT #2, P!(I, 1)
       INPUT #2, P!(I, 2)
       INPUT #2, SA!(I)
       INPUT #2, YBMI!(I)
       INPUT #2, ZBMI!(I)
       INPUT #2, TBTJ!(I)
       INPUT #2, G!(I)
       INPUT #2, P!(I, 5)
       INPUT #2, P!(I, 6)
       INPUT #2, NM
12770 GOTO 12810
12780  INPUT #2, P!(I, 3)
       INPUT #2, P!(I, 4)
       INPUT #2, P!(I, 1)
       INPUT #2, P!(I, 2)
       INPUT #2, SA!(I)
       INPUT #2, YBMI!(I)
       INPUT #2, ZBMI!(I)
       INPUT #2, TBTJ!(I)
       INPUT #2, G!(I)
       INPUT #2, P!(I, 5)
       INPUT #2, P!(I, 6)
       INPUT #2, NM
12810 NEXT I
2500  REM****************************************************************
2510  REM                          SUBROUTINE CPOPTP
2520  REM            THIS SUBROUTINE PRINTS CALCULATED PROPERTIES OF BEAM
2530  REM****************************************************************
2590  FOR I = 1 TO NBT
      CLS
      PRINT "     ****************************************************************"
      PRINT "                          ANALYSIS MULTIBEAM STRUCTURE"
      PRINT "     ****************************************************************"
      PRINT "     BEAM TYPE  "; I; "["; BTYP$(I, 1); "]"
      PRINT "              DIMENSION          :"
```

```
      PRINT "            (1)  "; USING "######"; P!(I, 3);
      PRINT "           :       E-MOD    ="; P!(I, 5)
      PRINT "            (2)  "; USING "######"; P!(I, 4);
      PRINT "           :       POIS     ="; P!(I, 2)
      PRINT "            (3)  "; USING "######"; P!(I, 5);
      PRINT "           .       AREA     ="; AAI(I)
      PRINT "            (4)  "; USING "######"; P!(I, 6);
      PRINT "           :       I-Y      ="; YMI!(I)
      PRINT "            (5)  "; USING "######"; P!(I, 7);
      PRINT "           :       I-Z      ="; ZMI!(I)
      PRINT "            (6)  "; USING "######"; P!(I, 8);
      PRINT "           :       J        ="; TRTJ!(I)
      PRINT "           (NODES)"; USING "######"; NN;
      PRINT "           :       G        ="; G(I)
      LOCATE 23, 5: PRINT "**************************************************************"
      LOCATE 24, 5: INPUT "ENTER TO CONTINUE ===> ", Q
3310  NEXT I
3000  REM*****************************************************************************
3020  REM                THIS SUBROUTINE AND PRINTS SHEAR KEY PROPERTIES
3030  REM*****************************************************************************
      CLS
      PRINT "     ****************************************************************"
      PRINT "                          ANALYSIS MULTIBEAM STRUCTURES"
      PRINT "     ****************************************************************"
       INPUT #2, KEYBI
       INPUT #2, NSKTN
      PRINT "      NO. OF SHEAR KEY    =", NSKTN
      PRINT "      SHEAR KEY TYPE DISTRIBUTION   ( SHEAR KEY NO./SHEAR KEY TYPE )"
      FOR I = 1 TO N - 1
      IF I = 1 THEN PRINT : : PRINT "          ";
      IF I = 8 THEN PRINT : PRINT "          ";
      IF I = 15 THEN PRINT : PRINT "          ";
      IF I = 22 THEN PRINT : PRINT "          ";
      IF I = 29 THEN PRINT : PRINT "          ";
       INPUT #2, iadn(I)
      PRINT USING "  ##"; I;
      PRINT "/"; iadn(I);
3200  NEXT I
3210  IF NSKTN - 10 <= 0 THEN GOTO 3250
3220  IF NSKTN - 10 > 0 THEN GOTO 3250
3230  GOTO 3620
3250  PRINT "     KEY NO. E-MOD    THK.     HZ      VC L.LEVEL K.LEVEL    POIS"
      FOR I = 1 TO NSKTN
      PRINT USING "      ##  "; I;
      FOR j = 1 TO 8
       INPUT #2, S!(I, j)
      NEXT j
3270  PRINT USING "#####.##"; S!(I, 1);
      PRINT USING "#####.##"; S!(I, 2);
      PRINT USING "#####.##"; S!(I, 3);
      PRINT USING "#####.##"; S!(I, 4);
      PRINT USING "#####.##"; S!(I, 5);
      PRINT USING "#####.##"; S!(I, 6);
      PRINT USING "#####.##"; S!(I, 7)
3620  NEXT I
      LOCATE 23, 5: PRINT "**************************************************************"
      LOCATE 24, 4: INPUT " ENTER TO CONTINUE ===> ", Q
      CLS
       INPUT #2, lc
       INPUT #2, unit$(1)
       INPUT #2, unit$(2)
       INPUT #2, NL
       INPUT #2, nhm
       INPUT #2, inc
       INPUT #2, lad
      FOR I = 1 TO NL
```

```
      CLS
      PRINT "     ****************************************************************"
      PRINT "                          ANALYSIS MULTIBEAM STRUCTURES"
      PRINT "     ****************************************************************"
      PRINT "           LOAD CASE No.                               = "; lc
      PRINT "           UNIT OF FORCES                              = "; unit$(1)
      PRINT "           NUMBER OF LOAD                              = "; NL
      PRINT "           NUMBER OF HARMONICS                         = "; nhm;
      PRINT "#"; inc
       INPUT #2, ldn(I)
4320   INPUT #2, r!(I)
       INPUT #2, v!(I)
       INPUT #2, w!(I)
       INPUT #2, c!(I)
       INPUT #2, e!(I)
       INPUT #2, tplds(I, 1)
      PRINT "       LOAD OF BEAM NUMBER    = "; ldn(I)
      PRINT "           LOAD MAGNITUDE OF                           = "; r!(I)
      PRINT "           WIDTH OF LOAD                               = "; v!(I)
      PRINT "           LENGTH OF LOAD                              = "; w!(I)
      PRINT "           LONGITUDINAL POSITION OF LOAD CENTROID      = "; c!(I)
      PRINT "           LOAD ECCENTRICITY                           = "; e!(I)
      PRINT "           LOAD TYPE                                   = "; tplds(I, 1)
      LOCATE 23, 5: PRINT "**************************************************************"
      LOCATE 24, 5: INPUT "ENTER TO CONTINUE ===> ", Q
      NEXT I
      CLS
18000 REM*****************************************************************************
18020 REM                     THIS SUBROUTINE READS ALL THE RESULTS
18030 REM*****************************************************************************
18050 REM*****BEAM DISPLACEMENTS*****
       INPUT #3, NP
18060 FOR I = 1 TO N STEP 2
18080 FOR K = 1 TO NP
18085  INPUT #3, X!(K)
18090 FOR j = 1 TO 4
18100  INPUT #2, rrr!(I, j, K)
18110 NEXT j
18120 NEXT K
18130 IF I - N < 0 THEN GOTO 18150
18140 IF I - N >= 0 THEN GOTO 18240
18150 II = I + 1
18170 FOR K = 1 TO NP
18180  INPUT #3, X!(K)
18190 FOR j = 1 TO 4
18200  INPUT #3, rrr!(II, j, K)
18210 NEXT j
18220 NEXT K
18230 NEXT I
18240 REM*****SHEAR KEY DISPLACEMENTS*****
18250 IF lad < 0 OR lad > 5 THEN GOTO 18270
18260 IF lad = 0 THEN GOTO 18410
18270 FOR I = 1 TO N - 1
18280 FOR K = 1 TO NP
18290  INPUT #3, X!(K)
18300 FOR j = 1 TO 4
18310  INPUT #3, DL!(I, j, K)
18320 NEXT j
18330 NEXT K
18340 FOR K = 1 TO NP
18345  INPUT #3, X!(K)
18350 FOR j = 1 TO 4
18360  INPUT #3, DH!(I, j, K)
18370 NEXT j
18380 NEXT K
18390 NEXT I
```

```
18400 REM*****BEAM FORCES*****
18410 FOR I = 1 TO N STEP 1
18430 FOR K = 1 TO NP
18440  INPUT #2, X!(K)
18450 FOR j = 1 TO 6
18460  INPUT #2, FB!(I, j, K)
18470 NEXT j
18480 NEXT K
18500 IF I - N < 0 THEN GOTO 18520
18510 IF I - N >= 0 THEN GOTO 18610
18520 II = I + 1
18540 FOR K = 1 TO NP
18550  INPUT #2, X!(K)
18560 FOR j = 1 TO 6
18570  INPUT #2, FB!(II, j, K)
18580 NEXT j
18590 NEXT K
18595 NEXT I
18600 REM*****BEAM STRESSES*****
18610 FOR I = 1 TO N
18630 FOR jj = 1 TO 2
18640 l = I + jj - 1
18650 II = lbdn(l)
18670 FOR K = 1 TO 4
18680  INPUT #2, YY!(II, K)
18690  INPUT #2, ZZ!(II, K)
18700 NEXT K
18710 FOR j = 1 TO NP
       INPUT #2, X!(j)
18760 FOR m = 1 TO 4
18800  INPUT #2, bet!(m, j, l)
18810 NEXT m
18820 NEXT j
      IF I - N < 0 THEN GOTO 18830
      IF I - N >= 0 THEN GOTO 18840
18830 NEXT jj
18840 NEXT I
18850 REM*****SHEAR KEY FORCES*****
18860 FOR I = 1 TO N - 1
18880 FOR K = 1 TO NP
18890  INPUT #2, X!(K)
18900 FOR j = 1 TO 4
18910  INPUT #2, FSL!(I, j, K)
18920 NEXT j
18930 NEXT K
18980 FOR K = 1 TO NP
18990 FOR j = 1 TO 4
19000  INPUT #2, FSR!(I, j, K)
19010 NEXT j
19020 NEXT K
19030 NEXT I
19040 CLOSE #2
10010 CLS
10020 GOSUB 10500
10180 LOCATE 9, 39: PRINT " "; N; "BEAMS "; N - 1; " KEYS "
10190 LOCATE 11, 37: PRINT "< 1 >   BEAM DISPLACEMENTS"
10200 LOCATE 12, 37: PRINT "< 2 >   SHEAR KEY DISPLACMENTS"
10210 LOCATE 13, 37: PRINT "< 3 >   BEAM FORCES"
10220 LOCATE 14, 37: PRINT "< 4 >   BEAM STRESS"
10230 LOCATE 15, 37: PRINT "< 5 >   SHEAR KEY FORCES"
10240 LOCATE 16, 37: PRINT "< 0 >   EXIT TO MAIN LINE"
10250 LOCATE 21, 15: PRINT "ENTER YOUR SELECTION ===> ";
10260 LOCATE 21, 48: INPUT Z
      IF Z = 0 THEN END
      IF Z < 1 OR Z > 5 THEN GOTO 10010
      LOCATE 22, 15: PRINT "BEAM OR SHEAR KEY NO.===> ";
      LOCATE 22, 40: INPUT I
      IF I < 0 OR I > N THEN GOTO 10010
10270 IF Z = 0 THEN END
10280 IF Z < 1 OR Z > 5 THEN GOTO 10350
10290 ON Z GOTO 10300, 10310, 10320, 10330, 10340
10300 GOSUB 8050: GOTO 10010
10310 GOSUB 8240: GOTO 10010
10320 GOSUB 8400: GOTO 10010
10330 GOSUB 8600: GOTO 10010
10340 GOSUB 8650: GOTO 10010
10500 REM HEAD OF FILE
10510 LOCATE 3, 13: PRINT ""
      LOCATE 5, 37: PRINT "M U L T I B E A M"
10520 LOCATE 7, 32: PRINT "K O N K U K   U N I V E R S I T Y"
10530 LOCATE 9, 13: PRINT "****************************************************"
10540 LOCATE 11, 13: PRINT "SELECT NEXT ACTION"
10550 LOCATE 20, 13: PRINT "****************************************************"
10560 RETURN
8000  REM*************************************
8010  REM          SUBROUTINE OOUTPS
8020  REM THIS SUBROUTINE PRINTS ALL THE RESULTS
8030  REM*************************************
8050  REM*****BEAM DISPLACEMENTS*****
      CLS
      PRINT "                    ****** DISPLACEMENTS OF BEAMS AT C.G.  ******"
8070  PRINT "                                  BEAM No.="; I
      PRINT "  AT POINT     LONGITUDINAL     HORIZONTAL      VERTICAL       ROTATION"
      PRINT
8080  FOR K = 1 TO NP
8085  PRINT USING "    #.###"; X!(K); : PRINT "L";
8100  PRINT USING "       ##.###^^^^^"; rrr!(I, 1, K);
      PRINT USING "       ##.###^^^^^"; rrr!(I, 2, K);
      PRINT USING "       ##.###^^^^^"; rrr!(I, 3, K);
      PRINT USING "       ##.###^^^^^"; rrr!(I, 4, K);
      PRINT
8120  NEXT K
      GOSUB 9050
      RETURN
8240  REM*** **SHEAR KEY DISPLACMENTS*****
      CLS
      PRINT "                    ******   DISPLACEMENT OF THE POINTS    ******"
      PRINT "                             LEFT SHEAR KEY NO. "; I
      PRINT "  AT POINT     LONGITUDINAL     HORIZONTAL      VERTICAL       ROTATION"
      PRINT
8250  IF Ind < 0 OR Ind > 0 THEN GOTO 8280
8260  IF Ind = 0 THEN RETURN
8280  FOR K = 1 TO NP
8290  PRINT USING "    #.###"; X!(K); : PRINT "L";
8310  PRINT USING "       ##.###^^^^^"; DL!(I, 1, K);
      PRINT USING "       ##.###^^^^^"; DL!(I, 2, K);
      PRINT USING "       ##.###^^^^^"; DL!(I, 3, K);
      PRINT USING "       ##.###^^^^^"; DL!(I, 4, K);
      PRINT
8330  NEXT K
      GOSUB 9050
      CLS
      PRINT "                    ******   DISPLACEMENT OF THE JOINTS   ******"
      PRINT "                             RIGHT SHEAR KEY NO. "; I
      PRINT "  AT POINT     LONGTUDINAL     HORIZONTAL      VERTICAL       ROTATION"
      PRINT
      FOR K = 1 TO NP
      PRINT USING "    #.###"; X!(K); : PRINT "L";
      PRINT USING "       ##.###^^^^^"; DR!(I, 1, K);
      PRINT USING "       ##.###^^^^^"; DR!(I, 2, K);
      PRINT USING "       ##.###^^^^^"; DR!(I, 3, K);
      PRINT USING "       ##.###^^^^^"; DR!(I, 4, K);
```

```
     PRINT
     NEXT K
     GOSUB 9050
     RETURN
3400 REM*****BEAM FORCES*****
3410 CLS
     PRINT "                    ******          BEAM FORCES          ******"
3420 PRINT "                                    BEAM No."; I
     PRINT " AT POINT  LONGITUDINAL  HORIZONTAL   VERTICAL    TORSION       M-XX       M-YY"
     PRINT
3435 FOR K = 1 TO NP
3440 PRINT USING "  #.### "; X!(K); : PRINT "L";
3460 PRINT USING "    ##.###^^^^"; FB!(1, 1, K);
     PRINT USING "  ##.###^^^^"; FB!(1, 2, K);
     PRINT USING " ##.###^^^^"; FB!(1, 3, K);
     PRINT USING " ##.###^^^^"; FB!(1, 4, K);
     PRINT USING " ##.###^^^^"; FB!(1, 5, K);
     PRINT USING " ##.###^^^^"; FB!(1, 6, K);
     PRINT
3480 NEXT I
     GOSUB 9050
     RETURN
3490 REM*****BEAM STRESSES*****
     CLS
3520 PRINT "                    ******   FIBER STRESS OF BEAM   ******"
3530 FOR jj = 1 TO 1
3540 I = I + jj - 1
3550 II = ibda(I)
3560 PRINT "                                    BEAM No."; I
     PRINT "  AT POINT  ";
3570 FOR K = 1 TO 4
3580 PRINT USING "   ###.##"; YY!(II, K);
3590 PRINT USING " ###.## "; XX!(II, K);
3700 NEXT K
     PRINT
     PRINT
3710 FOR j = 1 TO NP
3790 PRINT USING "   #.###"; X!(j); : PRINT "L";
3800 PRINT USING "       ##.###^^^^"; bst(1, j, I);
     PRINT USING "       ##.###^^^^"; bst(2, j, I);
     PRINT USING "       ##.###^^^^"; bst(3, j, I);
     PRINT USING "       ##.###^^^^"; bst(4, j, I);
     PRINT
3820 NEXT j
3830 NEXT jj
     GOSUB 9050
     RETURN
3850 REM*****SHEAR KEY FORCES*****
     CLS
3870 PRINT "                    ******  INTERNAL FORCES OF SHEAR KEY   ******"
     PRINT "                                  LEFT SHEAR KEYS NO. "; I
     PRINT "  AT POINT     LONGITUDINAL     HORIZONTAL       VERTICAL       ROTATION"
     PRINT
3880 FOR K = 1 TO NP
3890 PRINT USING "    #.###"; X!(K); : PRINT "L  ";
3910 PRINT USING "     ##.###^^^^"; PSLF!(1, 1, K);
     PRINT USING "     ##.###^^^^"; PSL!(1, 2, K);
     PRINT USING "     ##.###^^^^"; PSL!(1, 3, K);
     PRINT USING "     ##.###^^^^"; PSL!(1, 4, K);
     PRINT
3930 NEXT K
     GOSUB 9050
9040 CLS
     PRINT "                    ******  INTERNAL FORCES OF SHEAR KEY   ******"
     PRINT "                                  RIGHT SHEAR KEY NO.  "; I
     PRINT "  AT POINT     LONGITUDINAL     HORIZONTAL       VERTICAL       ROTATION"
     PRINT
     FOR K = 1 TO NP
     PRINT USING "    #.###"; X!(K); : PRINT "L  ";
     PRINT USING "     ##.###^^^^"; PSR!(1, 1, K);
     PRINT USING "     ##.###^^^^"; PSR!(1, 2, K);
     PRINT USING "     ##.###^^^^"; PSR!(1, 3, K);
     PRINT USING "     ##.###^^^^"; PSR!(1, 4, K);
     PRINT
     NEXT K
     GOSUB 9050
     RETURN
9050 LOCATE 4, 1: PRINT "-----------------------------------------------------------------------------------------"
     LOCATE 22, 1: PRINT "-----------------------------------------------------------------------------------------"
     LOCATE 23, 1: INPUT "ENTER TO CONTINUE  ===> ", Q
     RETURN
```

```
10    REM**********************************************************************
20    REM                               TRUSS.BAS
30    REM    THIS PROGRAM ENABLES THE ANALYSIS OF SIMPLY SUPPORTED MULTIBEAM
40    REM              STRUCTURES WITH TRUSS TYPE SHEAR KEYS PRINT DATA
100   REM**********************************************************************
      CLS
      '$DYNAMIC
      DIM TITLE$(16), NEQ(40)
      DIM um$(4)(2), NSETS, Ied, AREN!(15), ACORE(15), E!(18)
      DIM P!(10, 8), EA!(10), YBAR!(10), ZBAR!(10), TBTJ!(10), G!(10), BTYP$(10, 2)
      DIM S!(10, 8), YY!(10, 4), ZZ!(10, 4), R!(29, 24), B!(10, 4), bet(4, 15, 30)
      DIM r!(18), v!(15), u!(15), c!(15), a!(15), tpld$(15, 2), ian(15), x!(15)
      DIM D!(29, 8), DL!(29, 4, 15), DR!(29, 4, 15), FE!(29, 4, 15), sedn(29)
      DIM SS!(120, 40), RR!(120), ibdn(30), FS!(30, 6, 15), rrr!(30, 4, 15), F!(120)
      OPEN "I", #2, "disk.dat"
       INPUT #2, PA$
       INPUT #2, DA$
      CLOSE #2
      OPEN "I", #4, "KASN.DAT"
       INPUT #4, FILE$
       INPUT #4, prot
       INPUT #4, KEYS$
       INPUT #4, angl
      CLOSE #4
      FILES$ = DA$ + ":\MULTDATA\" + FILE$ + ".PEN"
      OPEN "I", #2, FILES$
540   DIM SCTP$(5)
550   SCTP$(1) = "RECTANGULAR"
560   SCTP$(2) = "TEE SECTION"
570   SCTP$(3) = "III SECTION"
580   SCTP$(4) = "HOLLOW CORE"
590   SCTP$(5) = "BOX SECTION"
      CLS
      PRINT "     ****************************************************************"
      PRINT "                              ANALYSIS MULTIBEAM STRUCTURES"
      PRINT "     ****************************************************************"
      PRINT "     STRUCTURE IDENTIFICATION"
       INPUT #2, N
       INPUT #2, NBT
       INPUT #2, SPAN
       INPUT #2, units(1)
      PRINT "               NO. OF BEAMS        =", N
      PRINT "               NO. OF BEAM TYPE    =", NBT
      PRINT "               SPAN LENGTH         =", SPAN
      PRINT "               UNIT OF LENGTH      =", um$(4)(1)
      PRINT "     BEAM TYPE DISTRIBUTION   [ BEAM NO./BEAM TYPE ]"
1040  FOR i = 1 TO N
      IF i = 1 THEN PRINT : : PRINT "              ";
      IF i = 8 THEN PRINT : PRINT "             ";
      IF i = 15 THEN PRINT : PRINT "              ";
      IF i = 22 THEN PRINT : PRINT "              ";
      IF i = 29 THEN PRINT : PRINT "              ";
       INPUT #2, ibdn(i)
1070  PRINT USING "  ##"; i;
      PRINT "/"; ibdn(i);
1080  NEXT i
      PRINT
      LOCATE 23, 5: PRINT "****************************************************************"
      LOCATE 24, 5: INPUT "ENTER TO CONTINUE ===> ", Q
      CLS
      FOR i = 1 TO NBT
       INPUT #2, BTYP$(i, 1)
      IF BTYP$(i, 1) = "RECTANGULAR" THEN GOTO 12650
      IF BTYP$(i, 1) = "TEE SECTION" THEN GOTO 12680
      IF BTYP$(i, 1) = "III SECTION" THEN GOTO 12680
      IF BTYP$(i, 1) = "HOLLOW CORE" THEN GOTO 12750
      IF BTYP$(i, 1) = "BOX SECTION" THEN GOTO 12780
12650  INPUT #2, P!(i, 3)
       INPUT #2, P!(i, 4)
       INPUT #2, P!(i, 1)
       INPUT #2, P!(i, 2)
       INPUT #2, EA!(i)
       INPUT #2, YBAR!(i)
       INPUT #2, ZBAR!(i)
       INPUT #2, TBTJ!(i)
       INPUT #2, G!(i)
12670 GOTO 12810
12680  INPUT #2, P!(i, 3)
       INPUT #2, P!(i, 4)
       INPUT #2, P!(i, 1)
       INPUT #2, P!(i, 2)
       INPUT #2, EA!(i)
       INPUT #2, YBAR!(i)
       INPUT #2, ZBAR!(i)
       INPUT #2, TBTJ!(i)
       INPUT #2, G!(i)
       INPUT #2, P!(i, 6)
12690 IF BTYP$(i, 1) = "RECTANGULAR" THEN GOTO 12650
      IF BTYP$(i, 1) = "TEE SECTION" THEN GOTO 12700
      IF BTYP$(i, 1) = "III SECTION" THEN GOTO 12710
12700 PRINT
12705 GOTO 12740
12710  INPUT #2, P!(i, 5)
       INPUT #2, P!(i, 8)
12740 GOTO 12810
12750  INPUT #2, P!(i, 3)
       INPUT #2, P!(i, 4)
       INPUT #2, P!(i, 1)
       INPUT #2, P!(i, 2)
       INPUT #2, EA!(i)
       INPUT #2, YBAR!(i)
       INPUT #2, ZBAR!(i)
       INPUT #2, TBTJ!(i)
       INPUT #2, G!(i)
       INPUT #2, P!(i, 5)
       INPUT #2, P!(i, 6)
       INPUT #2, AA
12770 GOTO 12810
12780  INPUT #2, P!(i, 3)
       INPUT #2, P!(i, 4)
       INPUT #2, P!(i, 1)
       INPUT #2, P!(i, 2)
       INPUT #2, EA!(i)
       INPUT #2, YBAR!(i)
       INPUT #2, ZBAR!(i)
       INPUT #2, TBTJ!(i)
       INPUT #2, G!(i)
       INPUT #2, P!(i, 5)
       INPUT #2, P!(i, 6)
       INPUT #2, AA
12810 NEXT i
3500  REM****************************************************************
3520  REM THIS SUBROUTINE PRINTS CALCULATED PROPERTIES OF BEAM
3530  REM****************************************************************
3590  FOR i = 1 TO NBT
      CLS
      PRINT "     ****************************************************************"
      PRINT "                              ANALYSIS MULTIBEAM STRUCTURE"
      PRINT "     ****************************************************************"
      PRINT "     BEAM TYPE "; i; "("; BTYP$(i, 1); ")"
      PRINT "           DIMENSION                  :"
```

```
      PRINT "             (1)     =  "; USING "####.###"; P!(i, 3);
      PRINT "           :       E-MOD    ="; P!(i, 1)
      PRINT "             (2)     =  "; USING "####.###"; P!(i, 4);
      PRINT "           :       POIS     ="; P!(i, 2)
      PRINT "             (3)     =  "; USING "####.###"; P!(i, 5);
      PRINT "           :       AREA     ="; AA!(i)
      PRINT "             (4)     =  "; USING "####.###"; P!(i, 6);
      PRINT "           :       I-Y      ="; YBMI!(i)
      PRINT "             (5)     =  "; USING "####.###"; P!(i, 7);
      PRINT "           :       I-Z      ="; ZBMI!(i)
      PRINT "             (6)     =  "; USING "####.###"; P!(i, 8);
      PRINT "           :       J        ="; TBTJ!(i)
      PRINT "           (BOXES)  =  "; USING "########"; NB;
      PRINT "           :       Q        ="; Q(i)
      LOCATE 23, 5: PRINT "*************************************************************"
      LOCATE 24, 5: INPUT "ENTER TO CONTINUE ===> ", Q
2810  NEXT i
3000  REM**********************************************************************
3020  REM THIS SUBROUTINE READS AND PRINTS SHEAR KEY PROPERTIES
3030  REM**********************************************************************
      CLS
      PRINT "       *************************************************************"
      PRINT "                             ANALYSIS MULTIBEAM STRUCTURES"
      PRINT "       *************************************************************"
       INPUT #2, KEYSO
       INPUT #2, NSKTR
      PRINT "     NO. OF SHEAR KEY   =", NSKTR
      PRINT "     SHEAR KEY TYPE DISTRIBUTION   | SHEAR KEY NO./SHEAR KEY TYPE |"
      FOR i = 1 TO N - 1
      IF i = 1 THEN PRINT : : PRINT "          ";
      IF i = 8 THEN PRINT : PRINT "          ";
      IF i = 15 THEN PRINT : PRINT "          ";
      IF i = 22 THEN PRINT : PRINT "          ";
      IF i = 29 THEN PRINT : PRINT "          ";
       INPUT #2, isdn(i)
      PRINT USING "  ##"; i;
      PRINT "/"; isdn(i);
3200  NEXT i
3210  IF NSKTR - 10 <= 0 THEN GOTO 3250
3220  IF NSKTR - 10 > 0 THEN GOTO 3250
3230  GOTO 3620
3250  PRINT "     KEY NO. S-MOD     THK.      M2       YC L.LEVEL R.LEVEL      KX        KO"
      FOR i = 1 TO NSKTR
      PRINT USING "       ##  "; i;
      FOR j = 1 TO 8
       INPUT #2, K!(i, j)
3270  PRINT USING "#####.##"; K!(i, j);
3280  NEXT j
      PRINT
3620  NEXT i
      LOCATE 23, 5: PRINT "*************************************************************"
      LOCATE 24, 4: INPUT " ENTER TO CONTINUE ===> ", Q
      CLS
       INPUT #2, lc
       INPUT #2, units(1)
       INPUT #2, units(2)
       INPUT #2, nl
       INPUT #2, nhm
       INPUT #2, inc
       INPUT #2, lad
      FOR i = 1 TO nl
      CLS
      PRINT "       *************************************************************"
      PRINT "                             ANALYSIS MULTIBEAM STRUCTURES"
      PRINT "       *************************************************************"
      PRINT "                 LOAD CASE No.                                  = "; lc
      PRINT "                 UNIT OF FORCES                                 = "; units(1)
      PRINT "                 NUMBER OF LOAD                                 = "; nl
      PRINT "                 NUMBER OF HARMONICS                            = "; nhm;
      PRINT "#"; inc
       INPUT #2, ldn(i)
4320   INPUT #2, r!(i)
       INPUT #2, v!(i)
       INPUT #2, u!(i)
       INPUT #2, c!(i)
       INPUT #2, e!(i)
       INPUT #2, tplds(i, 1)
      PRINT "        LOAD ON BEAM NUMBER    = "; ldn(i)
      PRINT "                 LOAD MAGNITUDE OF                              = "; r!(i)
      PRINT "                 WIDTH OF LOAD                                  = "; v!(i)
      PRINT "                 LENGTH OF LOAD                                 = "; u!(i)
      PRINT "                 LONGITUDINAL POSITION OF LOAD CENTROID = "; c!(i)
      PRINT "                 LOAD ECCENTRICITY                              = "; e!(i)
      PRINT "                 LOAD TYPE                                      =  "; tplds(i, 1)
      LOCATE 23, 5: PRINT "*************************************************************"
      LOCATE 24, 5: INPUT "ENTER TO CONTINUE ===> ", Q
      NEXT i
      CLS
18000 REM**********************************************************************
18020 REM                   THIS SUBROUTINE READS ALL THE RESULTS
18030 REM**********************************************************************
18030 REM*****BEAM DISPLACEMENTS*****
       INPUT #2, np
18060 FOR i = 1 TO N STEP 2
18080 FOR k = 1 TO np
18085  INPUT #2, x!(k)
18090 FOR j = 1 TO 4
18100  INPUT #2, rrr!(i, j, k)
18110 NEXT j
18120 NEXT k
18130 IF i - N < 0 THEN GOTO 18150
18140 IF i - N >= 0 THEN GOTO 18240
18150 ii = i + 1
18170 FOR k = 1 TO np
18180  INPUT #2, x!(k)
18190 FOR j = 1 TO 4
18200  INPUT #2, rrr!(ii, j, k)
18210 NEXT j
18220 NEXT k
18230 NEXT i
18240 REM*****SHEAR KEY DISPLACEMENTS*****
18250 IF lad < 5 OR lad > 8 THEN GOTO 18370
18260 IF lad = 0 THEN GOTO 18410
18270 FOR i = 1 TO N - 1
18280 FOR k = 1 TO np
18290  INPUT #2, x!(k)
18300 FOR j = 1 TO 4
18310  INPUT #2, DL!(i, j, k)
18320 NEXT j
18330 NEXT k
18340 FOR k = 1 TO np
18341  INPUT #2, x!(k)
18350 FOR j = 1 TO 4
18360  INPUT #2, DR!(i, j, k)
18370 NEXT j
18380 NEXT k
18390 NEXT i
18400 REM*****BEAM FORCES*****
18410 FOR i = 1 TO N STEP 2
18430 FOR k = 1 TO np
```

```
18440  INPUT #2, x2(k)
18450 FOR j = 1 TO 6
18460  INPUT #2, EE(i, j, k)
18470 NEXT j
18480 NEXT k
18500 IF i - N < 0 THEN GOTO 18520
18510 IF i - N >= 0 THEN GOTO 18610
18520 II = i + 1
18540 FOR k = 1 TO np
18550  INPUT #2, x1(k)
18560 FOR j = 1 TO 6
18570  INPUT #2, FE(II, j, k)
18580 NEXT j
18590 NEXT k
18595 NEXT i
18600 REM*****BEAM STRESSES*****
18610 FOR I = 1 TO N
18630 FOR jj = 1 TO 3
18640 l = I + jj - 1
18650 ll = ibdm(l)
18670 FOR k = 1 TO 4
18680  INPUT #2, TT(ll, k)
18690  INPUT #2, EE(ll, k)
18700 NEXT k
18710 FOR j = 1 TO np
       INPUT #2, x1(j)
18750 FOR m = 1 TO 4
18800  INPUT #2, Sat(m, j, l)
18810 NEXT m
18820 NEXT j
       IF I - N < 0 THEN GOTO 18830
       IF I - N >= 0 THEN GOTO 18840
18830 NEXT jj
18840 NEXT I
18850 REM*****SHEAR KEY FORCES*****
18860 FOR i = 1 TO N - 1 STEP 2
18880 FOR k = 1 TO np
18890  INPUT #2, x1(k)
18900 FOR j = 1 TO 4
18910  INPUT #2, FS(i, j, k)
18930 NEXT j
18950 NEXT k
18940 IF i - N + 1 < 0 THEN GOTO 18960
18950 IF i - N + 1 >= 0 THEN GOTO 19040
18960 ii = i + 1
18980 FOR k = 1 TO np
18990 FOR j = 1 TO 4
19000  INPUT #2, FS(ii, j, k)
19010 NEXT j
19020 NEXT k
19030 NEXT i
19040 CLOSE #2
10010 CLS
10020 GOSUB 10500
10180 LOCATE 9, 29: PRINT "  "; N; "BEAMS  "; N - 1; "KEYS  "
10190 LOCATE 11, 37: PRINT "< 1 >   BEAM DISPLACEMENTS"
10200 LOCATE 12, 37: PRINT "< 2 >   SHEAR KEY DISPLACMENTS"
10210 LOCATE 13, 37: PRINT "< 3 >   BEAM FORCES"
10220 LOCATE 14, 37: PRINT "< 4 >   BEAM STRESS"
10230 LOCATE 15, 37: PRINT "< 5 >   SHEAR KEY FORCES"
10240 LOCATE 18, 37: PRINT "< 0 >   EXIT TO MAIN LINE"
10250 LOCATE 21, 15: PRINT "ENTER YOUR SELECTION ===> ";
10260 LOCATE 21, 40: INPUT Z
       IF Z = 0 THEN END
       IF Z < 1 OR Z > 5 THEN GOTO 10010
       LOCATE 22, 15: PRINT "BEAM OR SHEAR KEY NO.==== ";
       LOCATE 22, 40: INPUT i
       IF i < 0 OR i > N THEN GOTO 10010
10270 IF Z = 0 THEN END
10280 IF Z < 1 OR Z > 5 THEN GOTO 10250
10290 ON Z GOTO 10300, 10310, 10320, 10330, 10340
10300 GOSUB 8050: GOTO 10010
10310 GOSUB 8240: GOTO 10010
10320 GOSUB 8400: GOTO 10010
10330 GOSUB 8600: GOTO 10010
10340 GOSUB 8850: GOTO 10010
10500 REM HEAD OF FILE
10510 LOCATE 3, 13: PRINT ""
       LOCATE 5, 31: PRINT "M U L T I B E A M"
10520 LOCATE 7, 22: PRINT "C A R L E T O N   U N I V E R S I T Y"
10530 LOCATE 9, 13: PRINT "**********************************************************"
10540 LOCATE 11, 13: PRINT "SELECT NEXT ACTION"
10550 LOCATE 20, 13: PRINT "**********************************************************"
10560 RETURN
8000  REM************************************************************
8020  REM              THIS SUBROUTINE PRINTS ALL THE RESULTS
8030  REM************************************************************
8050  REM*****BEAM DISPLACEMENTS*****
      CLS
      PRINT "                  ****** DISPLACEMENTS OF BEAMS AT C.G. ******"
8070  PRINT "                                       BEAM No.="; i
      PRINT "  AT POINT     LONGITUDINAL     HORIZONTAL       VERTICAL         ROTATION"
      PRINT
8060  FOR k = 1 TO np
8063  PRINT USING "    #.###"; x1(k); : PRINT "L";
8100  PRINT USING "       ##.###^^^^"; rrr(i, 1, k);
      PRINT USING "       ##.###^^^^"; rrr(i, 2, k);
      PRINT USING "       ##.###^^^^"; rrr(i, 3, k);
      PRINT USING "       ##.###^^^^"; rrr(i, 4, k);
      PRINT
8120  NEXT k
      GOSUB 9050
      RETURN
8240  REM*****SHEAR KEY DISPLACMENTS*****
      CLS
      PRINT "                  ******  DISPLACEMENT OF THE JOINTS    ******"
      PRINT "                                  LEFT SHEAR KEY NO. "; i
      PRINT "  AT POINT     LONGITUDINAL     HORIZONTAL       VERTICAL         ROTATION"
      PRINT
8250  IF lad < 0 OR lad > 0 THEN GOTO 8260
8260  IF lad = 0 THEN RETURN
8280  FOR k = 1 TO np
8290  PRINT USING "    #.###"; x1(k); : PRINT "L";
8310  PRINT USING "       ##.###^^^^"; DL(i, 1, k);
      PRINT USING "       ##.###^^^^"; DL(i, 2, k);
      PRINT USING "       ##.###^^^^"; DL(i, 3, k);
      PRINT USING "       ##.###^^^^"; DL(i, 4, k);
      PRINT
8330  NEXT k
      GOSUB 9050
      CLS
      PRINT "                  ******  DISPLACEMENT OF THE JOINTS    ******"
      PRINT "                                  RIGHT SHEAR KEY NO. "; i
      PRINT "  AT POINT     LONGITUDINAL     HORIZONTAL       VERTICAL         ROTATION"
      PRINT
      FOR k = 1 TO np
      PRINT USING "    #.###"; x1(k); : PRINT "L";
      PRINT USING "       ##.###^^^^"; DR(i, 1, k);
      PRINT USING "       ##.###^^^^"; DR(i, 2, k);
      PRINT USING "       ##.###^^^^"; DR(i, 3, k);
```

```
      PRINT USING "       ##.###^^^^"; BR!(i, 4, k);
      PRINT
      NEXT k
      GOSUB 9050
      RETURN
8400  REM*****BEAM FORCES*****
8410  CLS
      PRINT "                    ******           BEAM FORCES            ******"
8420  PRINT "                                     BEAM No.="; i
      PRINT " AT POINT  LONGITUDINAL  HORIZONTAL   VERTICAL   TORSION     M-ZZ      M-YY"
      PRINT
8430  FOR k = 1 TO np
8440  PRINT USING "  #.### "; x!(k); : PRINT "L";
8450  PRINT USING "    ##.###^^^^"; FB!(i, 1, k);
      PRINT USING "  ##.###^^^^"; FB!(i, 2, k);
      PRINT USING " ##.###^^^^"; FB!(i, 3, k);
      PRINT USING " ##.###^^^^"; FB!(i, 4, k);
      PRINT USING " ##.###^^^^"; FB!(i, 5, k);
      PRINT USING " ##.###^^^^"; FB!(i, 6, k);
      PRINT
8480  NEXT k
      GOSUB 9050
      RETURN
8600  REM*****BEAM STRESSES*****
      CLS
8620  PRINT "                   ******   FIBER STRESS OF BEAM   ******"
8630  FOR jj = 1 TO 3
8640  i = i + jj - 1
8650  ii = ibdn(i)
8660  PRINT "                                    BEAM No."; i
      PRINT "  AT POINT  ";
8670  FOR k = 1 TO 4
8680  PRINT USING "   ###.##"; YY!(ii, k);
8690  PRINT USING " ###.## "; ZZ!(ii, k);
8700  NEXT k
      PRINT
      PRINT
8710  FOR j = 1 TO np
8790  PRINT USING "    #.###"; x!(j); : PRINT "L";
8800  PRINT USING "        ##.###^^^^"; bst(1, j, i);
      PRINT USING "        ##.###^^^^"; bst(2, j, i);
      PRINT USING "        ##.###^^^^"; bst(3, j, i);
      PRINT USING "        ##.###^^^^"; bst(4, j, i);
      PRINT
8820  NEXT j
8830  NEXT jj
      GOSUB 9050
      RETURN
8850  REM*****SHEAR KEY FORCES*****
      CLS
8870  PRINT "                  ******  INTERNAL FORCES OF SHEAR KEY   ******"
      PRINT "                                 SHEAR KEYS NO. "; i
      PRINT "  AT POINT    LONGITUDINAL    HORIZONTAL     VERTICAL      ROTATION"
      PRINT
8880  FOR k = 1 TO np
8890  PRINT USING "    #.###"; x!(k); : PRINT "L  ";
8910  PRINT USING "     ##.###^^^^"; FS!(i, 1, k);
      PRINT USING "     ##.###^^^^"; FS!(i, 2, k);
      PRINT USING "     ##.###^^^^"; FS!(i, 3, k);
      PRINT USING "     ##.###^^^^"; FS!(i, 4, k);
      PRINT
8930  NEXT k
      GOSUB 9050
9045  RETURN
9050  LOCATE 4, 1: PRINT "------------------------------------------------------------------------"
      LOCATE 23, 1: PRINT "------------------------------------------------------------------------"
      LOCATE 24, 5: INPUT "ENTER TO CONTINUE  .... ", Q
      RETURN
```